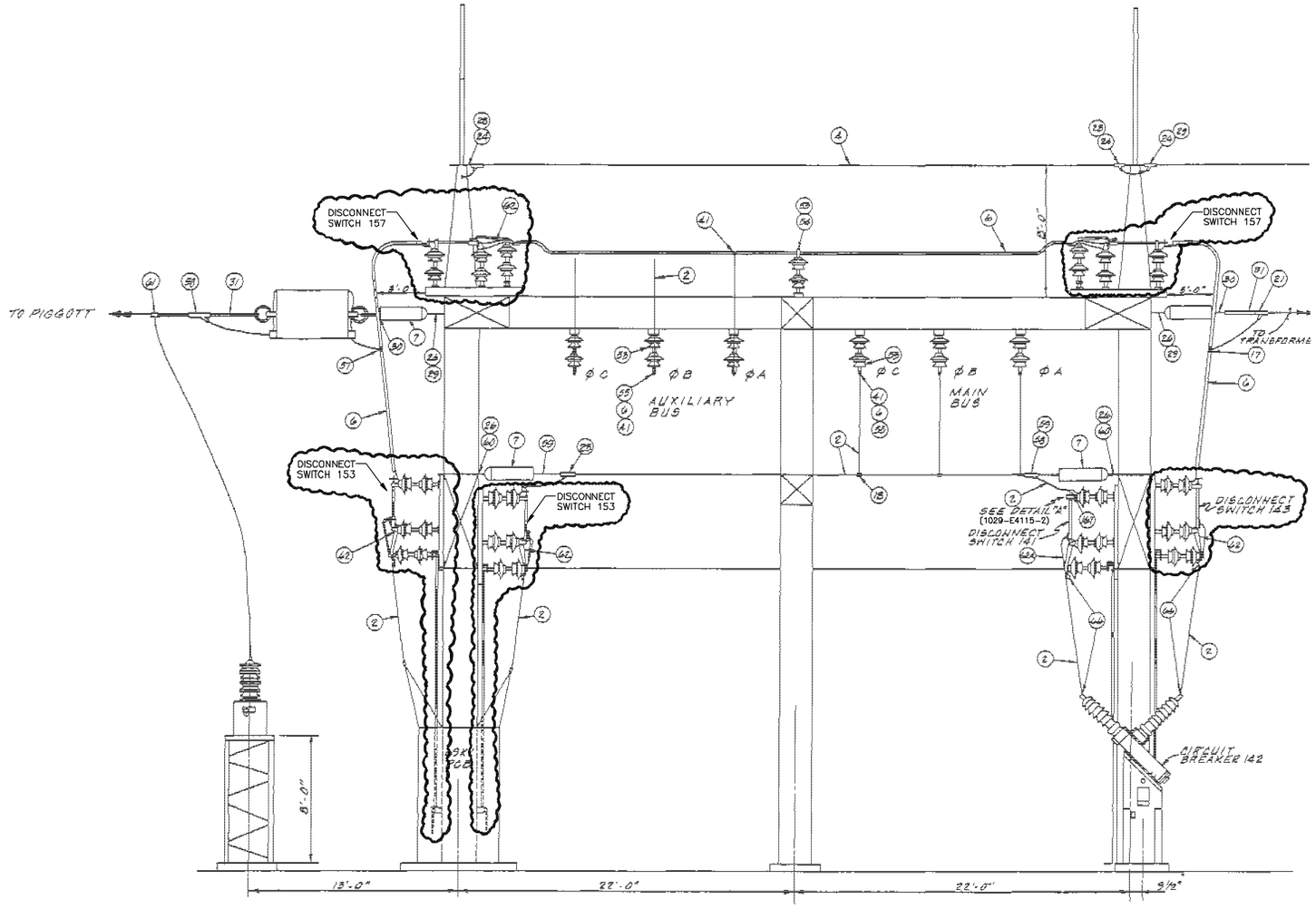

SECTION "C-C"

(REF DWG 1029-E4006)

NOTES:

1. SEE DRAWING 1029-E4007 FOR PCB 102 MATERIAL LIST.

WORK THIS CONTRACT

Reference Old drawing number: EE-M-1029-0047

REV	DESCRIPTION	DRAWN	CHKD
9	SWITCH REPLACEMENT	GBJ 10-05	KSH 10-05
8	PCB 102 REPLACEMENT	DKT 03-95	DEJ 02-96
7	REPLACED SWITCH 101	MHJ 05-94	
7	REVISED PER FIELD MARKS	MHJ 06-94	DEJ 06-94
5	XFMR #2 AS-BUILT; SCANNED AND RENUMBERED	LPR 03-92	CEV 10-93
4	INSTALL LINE TRAP ON PIGGOTT LINE, PHASE A	WC 12-89	JH 12-89

UNITED STATES DEPARTMENT OF ENERGY
SOUTHWESTERN POWER ADMINISTRATION
TULSA, OKLAHOMA

KENNETT SUBSTATION
69KV STRUCTURE
ELECTRICAL SECTION "C-C"

SCALE	NOTED
DRAWN	RLD
CHECKED	
SUBMITTED	
APPROVED	

DRAWING NUMBER: 1029-E4115-1

FILE NAME: E4115-1

SHEET NUMBER: 1 OF 2

4' 2' 0 4' 8'

SCALE: 1/4"=1'-0"

Border name: A1ASL201
Last Edited: 10/06/05 12:50:17
brian.johnson

Size: 36 x 24
Last File Name: \\Pegasus\Drawings\Electrical_Stations\Kennett\A27060_-_Disconnect_Switch_Replacement_-_Scott_Holland\E4115-1_KEN.dwg