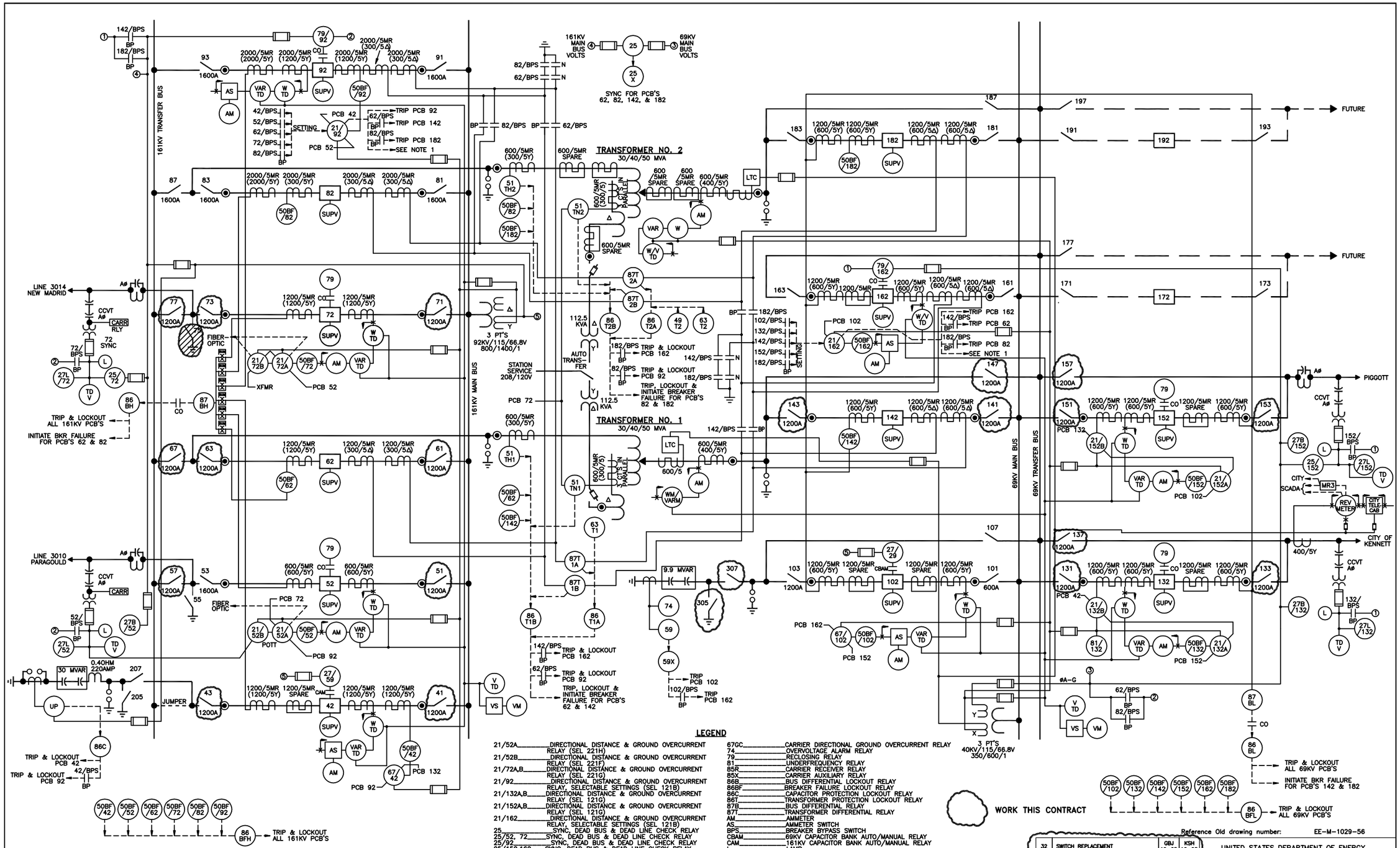

WORK THIS CONTRACT

LEGEND

21/52A	DIRECTIONAL DISTANCE & GROUND OVERCURRENT RELAY (SEL 221H)
21/52B	DIRECTIONAL DISTANCE & GROUND OVERCURRENT RELAY (SEL 221F)
21/72A,B	DIRECTIONAL DISTANCE & GROUND OVERCURRENT RELAY (SEL 221G)
21/92	DIRECTIONAL DISTANCE & GROUND OVERCURRENT RELAY, SELECTABLE SETTINGS (SEL 121B)
21/132A,B	DIRECTIONAL DISTANCE & GROUND OVERCURRENT RELAY (SEL 121G)
21/152A,B	DIRECTIONAL DISTANCE & GROUND OVERCURRENT RELAY (SEL 121G)
21/162	DIRECTIONAL DISTANCE & GROUND OVERCURRENT RELAY, SELECTABLE SETTINGS (SEL 121B)
25	SYNC, DEAD BUS & DEAD LINE CHECK RELAY
25/52, 72	SYNC, DEAD BUS & DEAD LINE CHECK RELAY
25/92	SYNC, DEAD BUS & DEAD LINE CHECK RELAY
25/152,162	SYNC, DEAD BUS & DEAD LINE CHECK RELAY
27B	DEAD BUS CHECK RELAY
27L	DEAD LINE CHECK RELAY
27/29	CAPACITOR VOLTAGE CONTROL RELAY (CVD)
27/59	CAPACITOR VOLTAGE CONTROL RELAY (BE1-27/59)
49T	TRANSFORMER WINDING HOT-SPOT RELAY
50BF	BREAKER FAILURE RELAY
51TH	TRANSFORMER HIGH-SIDE OVERCURRENT RELAY
51TN	TRANSFORMER NEUTRAL OVERCURRENT RELAY
59	OVERVOLTAGE RELAY
59X	OVERVOLTAGE AUXILIARY RELAY
63T	TRANSFORMER SUDDEN PRESSURE RELAY
67/42	DIRECTIONAL OVERCURRENT RELAY (SEL 167)
67/102	DIRECTIONAL OVERCURRENT RELAY (SEL 167)
67GB	BACKUP DIRECTIONAL GROUND OVERCURRENT RELAY
67GC	CARRIER DIRECTIONAL GROUND OVERCURRENT RELAY
74	OVERVOLTAGE ALARM RELAY
79	RECLOSING RELAY
81	UNDERFREQUENCY RELAY
85R	CARRIER RECEIVER RELAY
85X	CARRIER AUXILIARY RELAY
86B	BUS DIFFERENTIAL LOCKOUT RELAY
86BF	BREAKER FAILURE LOCKOUT RELAY
86C	CAPACITOR PROTECTION LOCKOUT RELAY
86T	TRANSFORMER PROTECTION LOCKOUT RELAY
87B	BUS DIFFERENTIAL RELAY
87T	TRANSFORMER DIFFERENTIAL RELAY
AM	AMMETER
AS	AMMETER SWITCH
BPS	BREAKER BYPASS SWITCH
CBAM	69KV CAPACITOR BANK AUTO/MANUAL RELAY
CAM	161KV CAPACITOR BANK AUTO/MANUAL RELAY
L	LAMP
LTC	LOAD TAP CHANGER
PS	PHASE SHIFTING TRANSFORMER
REV METER	TRANSDATA EMS60
UP	CAPACITOR UNBALANCE RELAY (S&C UP)
VAR	VARMETER
VAR TD	VAR TRANSDUCER
VM	VOLTMETER
VS	VOLTMETER SWITCH
V TD	VOLT TRANSDUCER
W	WATTMETER
W TD	WATT TRANSDUCER
W/V TD	WATT/VAR TRANSDUCER

NOTES

1. WITH BOTH BUS TIES PROTECTING ONE TRANSFORMER, EACH BUS TIE LINE RELAYING TRIPS BOTH BUS TIES.
2. ALL LINE RELAYING TRIPS PCB ASSOCIATED WITH LINE RELAYING CT & INITIATES BREAKER FAILURE FOR THAT PCB.

Reference Old drawing number: EE-M-1029-56

REV	DESCRIPTION	DRAWN	CHKD
32	SWITCH REPLACEMENT	GBJ 10-05	KSH 10-05
31	ADDED 81 UNDERFREQUENCY RELAY TO LEGEND, CHANGED 7 SYMBOLS TO # SYMBOLS	MEW 02-03	DEJ 02-03
30	81/132 UNDERFREQUENCY RELAY ADDITION, AS-BUILT	DEW 08-00	DEJ 08-00
29	FIBER CONVERSION AND REVENUE METER REPLACEMENT PROJECT	MEW 12-99	DEJ 10-00
28	SWITCH REPLACEMENT	LSC 11-99	CEV 10-00
27	REPLACED 21/52A & B, AS-BUILT	DEW 03-98	DEJ 03-98

UNITED STATES DEPARTMENT OF ENERGY
SOUTHWESTERN POWER ADMINISTRATION
TULSA, OKLAHOMA

KENNETT SUBSTATION

ONE LINE DIAGRAM

SCALE	N.T.S.
DRAWN	DEW
CHECKED	DEJ
SUBMITTED	DEJ
APPROVED	DEJ
DRAWING NUMBER	1029-E1002
FILE NAME	E1002
SHEET NUMBER	1 OF 1

Border name: A1ASL201
Last Edited: 12/01/05 11:17:33
scott.holland
Size: 36 x 24
Last File Name: \\Pegasus\Drawings\Electrical_Stations\Kennett\A27060_-_Disconnect_Switch_Replacement_-_Scott_Holland\E1002_KEN.dwg