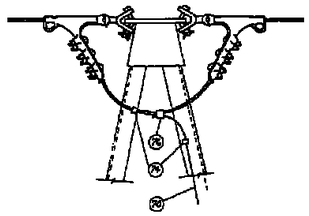

TYPICAL
DETAIL A
NO SCALE

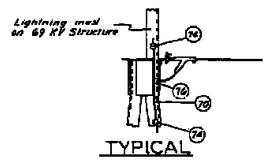

TYPICAL
DETAIL B

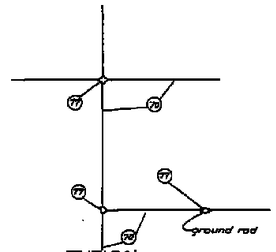

TYPICAL
GRID CROSSING &
GROUND ROD
CONNECTION DETAIL
No SCALE

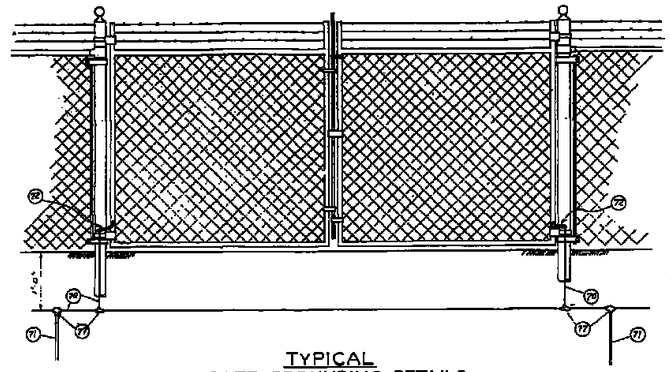

TYPICAL
GATE GROUNDING DETAILS
NO SCALE

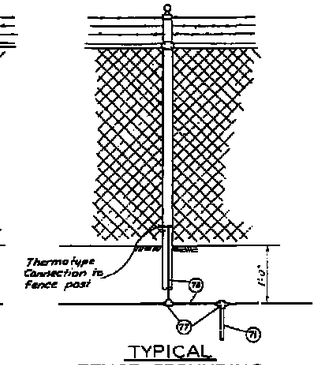

TYPICAL
FENCE GROUNDING
DETAILS
NO SCALE

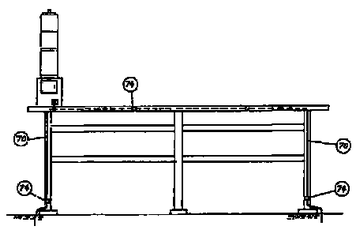

TYPICAL
EQUIPMENT TABLE
GROUNDING DETAIL
NO SCALE

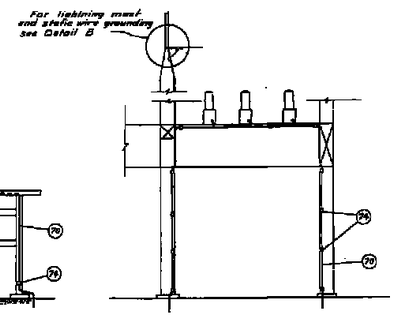

TYPICAL 69 KV
INSTRUMENT TRANSFORMER
GROUNDING DETAIL
NO SCALE

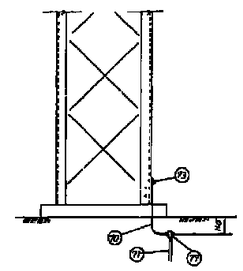

TYPICAL
STRUCTURE COLUMN
GROUNDING DETAIL
(NO SCALE)

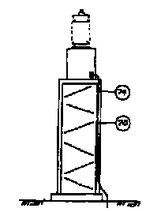

TYPICAL
COUPLING CAPACITOR
POTENTIAL DEVICE
AND POTENTIAL
TRANSFORMER
GROUNDING DETAIL
(NO SCALE)

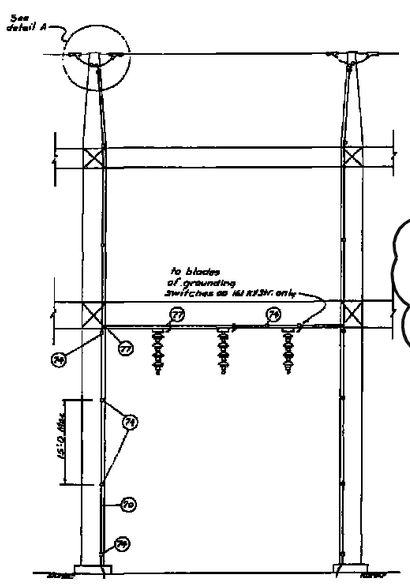

TYPICAL
STATIC WIRE/DISCONNECT SWITCH
GROUNDING DETAIL
(NO SCALE)

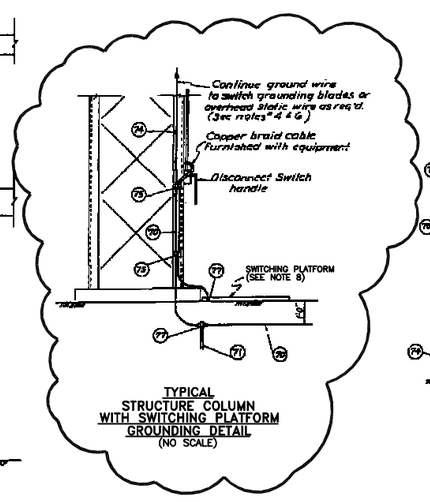

TYPICAL
STRUCTURE COLUMN
WITH SWITCHING PLATFORM
GROUNDING DETAIL
(NO SCALE)

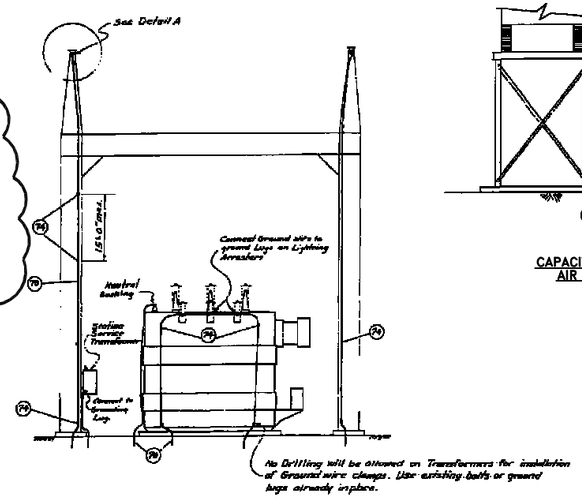

TRANSFORMER GROUNDING DETAIL
69KV LIGHTNING ARRESTER GROUNDING SHOWN
161KV LIGHTNING ARRESTER GROUNDING SIMILAR
(NO SCALE)

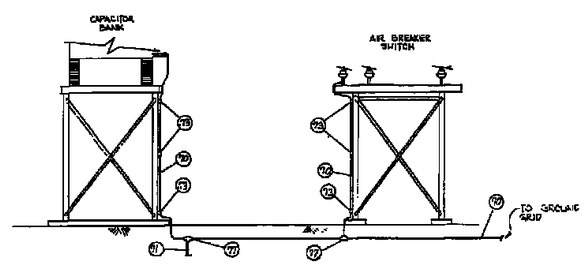

CAPACITOR BANK, CURRENT TRANSFORMER AND
AIR BREAKER SWITCH GROUNDING DETAIL
(NO SCALE)

WORK THIS CONTRACT

BILL OF GROUNDING MATERIALS

ITEM NO.	DESCRIPTION	QUANTITY
70	Grounding Cable, 4/0 AWG, soft drawn, stranded copper (Gov't-furnished)	8300'
71	Ground Rod, 3/4" x 10'-0" Copperweld, Hubbard # 86.50, or equal	34
72	Flexible Copper Braid, Anderson, GB-200-6A, or equal	2
73	Ground Connector, 4/0 Cable to Flat, Burndy GB 27, or equal	38
74	Ground Connector, 4/0 or 7" Steel Cable to Flat, Burndy GBM 46-29 or equal	120
75	Ground Connector, two 4/0 cables to flat, Burndy GC 2929, or equal	40
76	Cable Connector, 4/0 copper to 3/8" steel strand, Burndy KSU29, or equal	15
77	Ground Connector, Thermo type, Cadweld or Thermoweld, or equal	AS REQUIRED

NOTES

1. Buried 4/0 cables shall be minimum depth of 1'-0" below surface. (Equipment grounding grid)
2. All underground connections shall be of the Thermo type, Cross or Tee, Cable to Cable, or Ground Rod, as required.
3. All exposed copper cable to copper cable splices and taps shall be made with thermo type connections.
4. Switch grounding blades on 161 Structure shall be connected to grounding grid with 4/0 copper.
5. All fastenings of copper ground cables to steel structures shall be made with clamp type connectors, 15'-0" Maximum spacing.
6. Static Wire Peaks on 161 KV, Transformer, and 69 KV Structures shall be connected to Grounding Grid with 4/0 copper.
7. Fence shall be grounded with Thermo connections to posts at Approximately 30'Ft. intervals.
8. 20 — Switching Platforms to be furnished by the Government and installed by the Contractor.
9. Switch grounding blades on 69-KV Capacitor Bank Disconnect Switch shall be connected to grounding grid with 4/0 copper.

Reference Old drawing number: EE-M-1029-0034

REV	DESCRIPTION	DRAWN	CHKD	APPROVED
7	SWITCH REPLACEMENT	GBJ 10-05	KSH 10-05	
6	~~SHEET 25 NO REVISE~~ SCANNED AND RENUMBERED	JRB 10-93	CEV 10-93	
5	AS-BUILT	CAH 07-90	GGP 07-90	
4	RECORD DRAWING	KEB 01-90	JB 02-90	
3	ADD CAP BANK GRD	SWC 05-88	OKB 05-88	

UNITED STATES DEPARTMENT OF ENERGY
SOUTHWESTERN POWER ADMINISTRATION
TULSA, OKLAHOMA

KENNETT SUBSTATION
GROUNDING DETAILS

SCALE	N.T.S.
DRAWN	KEB
CHECKED	KEB
SUBMITTED	FH
APPROVED	KEW
DRAWING NUMBER	1029-E3206
FILE NAME	E3206
SHEET NUMBER	1 OF 1

Border name: A1ASL201 Size: 36 x 24
Last Edited: 10/06/05 10:05:20 Last File Name: \\Pegasus\Drawings\Electrical_Stations\Kennett\A27060_-_Disconnect_Switch_Replacement_-_Scott_Holland\E3206_KEN.dwg
brian_johnson