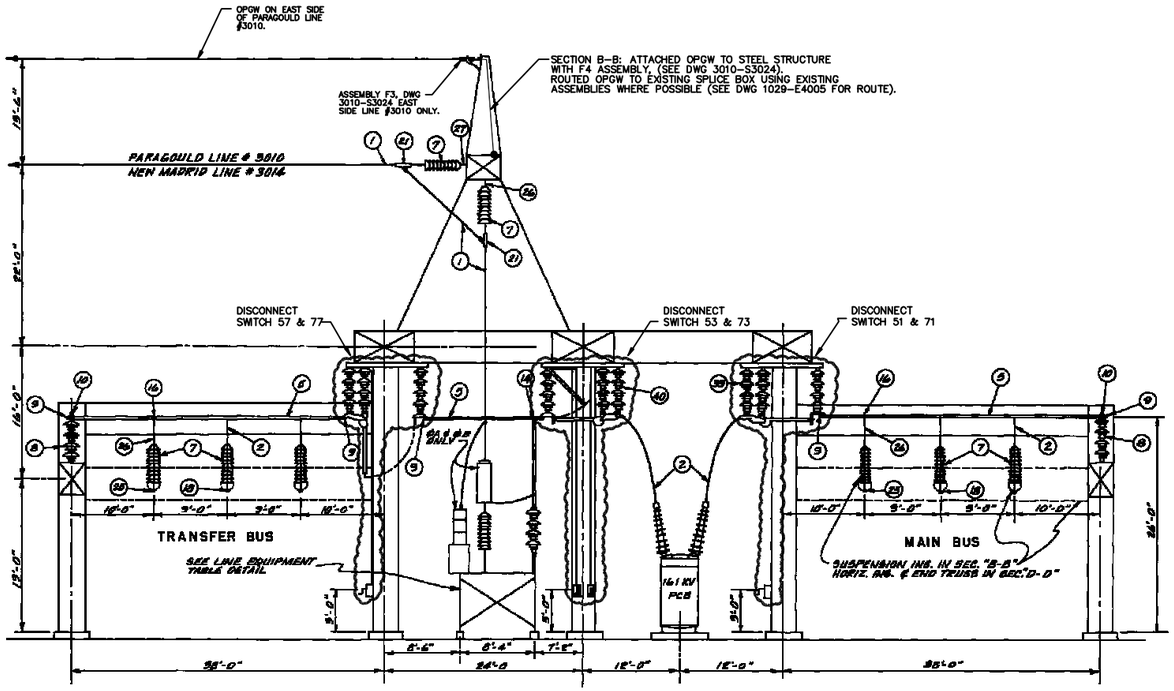

SECTIONS B-B AND D-D
SCALE: 1/8"=1'
REF. DWG 1029-E4005
(EE-M-1029-0035)

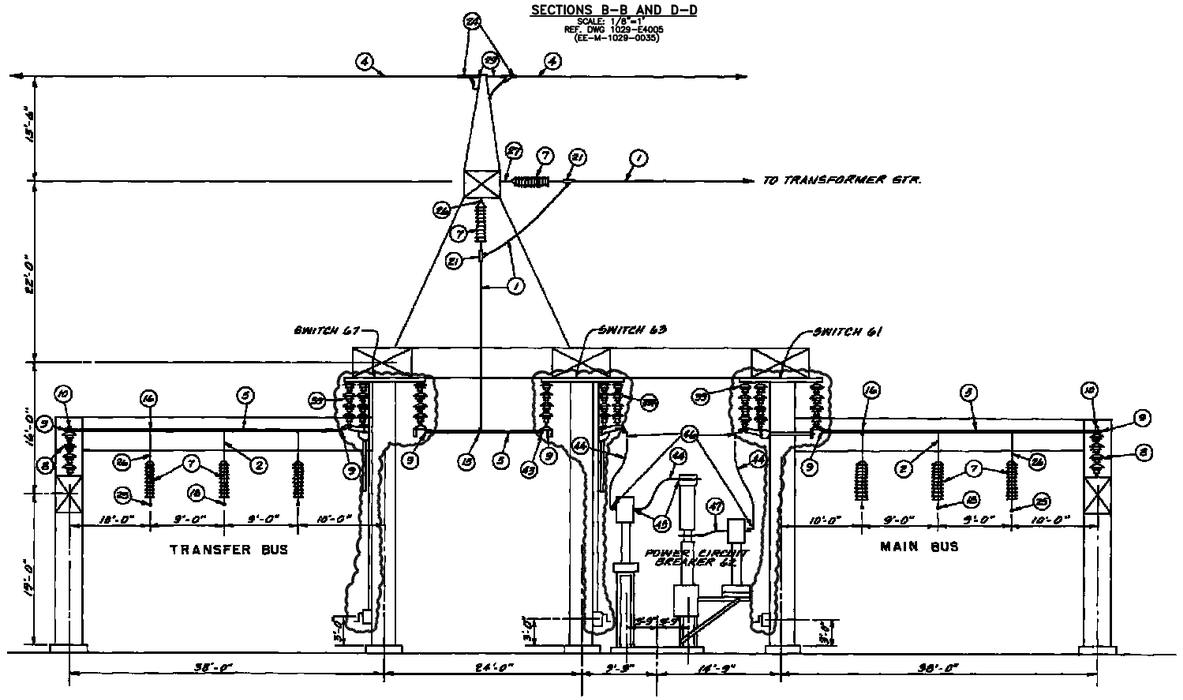

SECTION C-C
SCALE: 1/8"=1'
REF. DWG. 1029-E4005
(EE-M-1029-0035)

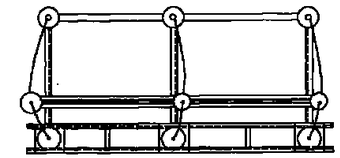

PLAN

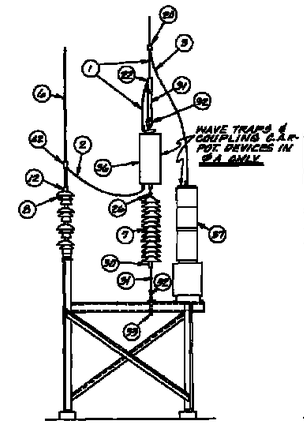

PHASE WITH WAVE TRAP

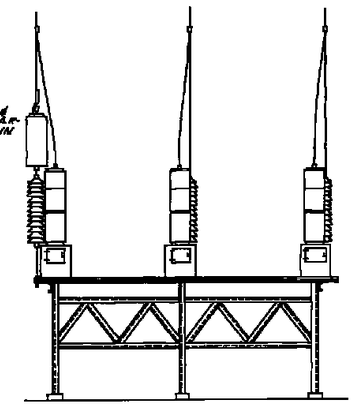

TYPICAL FRONT ELEVATION

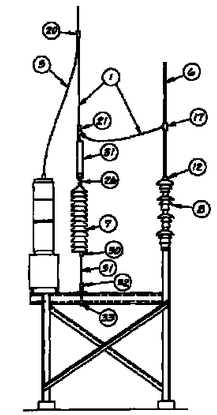

PHASE WITHOUT WAVE TRAP

LINE EQUIPMENT TABLE

WORK THIS CONTRACT

8' 4' 0 8' 16'
1/8"=1'-0"

Reference Old drawing number: EE-M-1028-0044

REV	DESCRIPTION	DRAWN	CHKD
4	SWITCH REPLACEMENT	GBJ 10-05	KSH 10-05
3	OPGW AS-BUILT	DIK 12-97	JEF 12-97
2	REV PER SPRECHER SCHUM PCB 82-SC AND 1984 S.C. MODIFICATIONS AS-BUILT	RLD 05-87	ACC 06-87
1	REMOVED "BY OTHERS" NOTES TO CONTRACTOR	LAG 05-67	05-67

UNITED STATES DEPARTMENT OF ENERGY
SOUTHWESTERN POWER ADMINISTRATION
TULSA, OKLAHOMA

KENNETT SUBSTATION
161KV STRUCTRUE
ELECTRICAL DETAILS

SCALE: NOTED
DRAWN
CHECKED
SUBMITTED
APPROVED

DRAWING NUMBER: 1029-E4107
FILE NAME: E4107
SHEET NUMBER: 1 OF 1

Border name: A1ASL201 Size: 36 x 24
Last Edited: 10/06/05 12:07:16 Last File Name: \\Pegasus\Drawings\Electrical_Stations\Kennett\A27060_-_Disconnect_Switch_Replacement_-_Scott_Holland\E4107_JKEN.dwg
brian.johnson