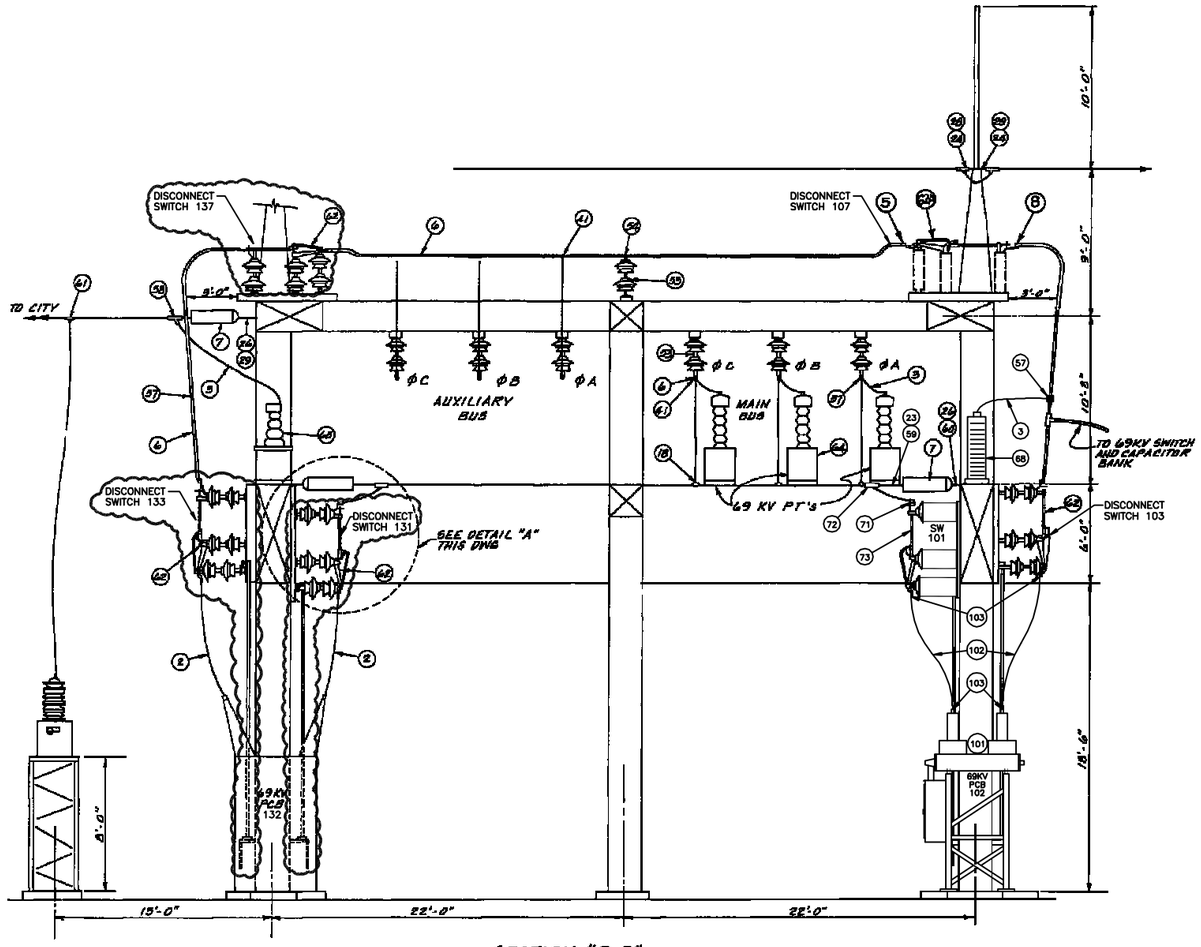

SECTION "D-D"

(REF DWG 1029-E4006)

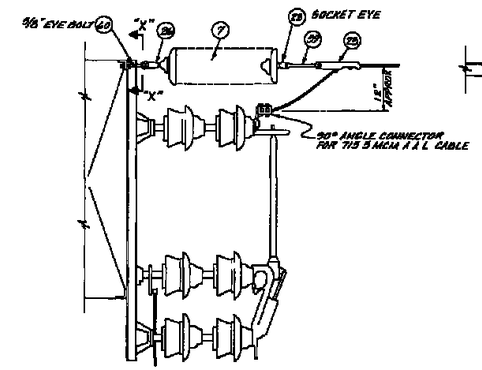

DETAIL "A"

NO SCALE

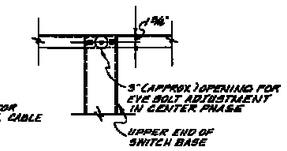

SECTION "X-X"

NOTES:

1. SEE DRAWING 1029-E4007 FOR PCB 102 MATERIAL LIST.

WORK THIS CONTRACT

Reference Old drawing number: EE-M-1029-0047

REV	DESCRIPTION	DRWN	CHKD	APPROVED
10	SWITCH REPLACEMENT	OBJ 10-05	KSH 10-05	
9	SWITCH REPLACEMENT	LSC 11-99		
8	PCB 102 REPLACEMENT	DKT 03-95	DEJ 02-96	
7	REPLACED SWITCH 101	MHJ 05-94		
6	REVISED PER FIELF MARKS	MHJ 06-94	DEJ 06-94	
5	XFMR #2 AS-BUILT, SCANNED AND RENUMBERED	LPR 03-92	CEV 10-93	

UNITED STATES DEPARTMENT OF ENERGY
SOUTHWESTERN POWER ADMINISTRATION
TULSA, OKLAHOMA

KENNETT SUBSTATION
69KV STRUCTURE
ELECTRICAL SECTION "D-D"

SCALE: NOTED
DRAWN: RLD
CHECKED:
SUBMITTED:
APPROVED:

DRAWING NUMBER: 1029-E4115-2
FILE NAME: E4115-2
SHEET NUMBER: 2 OF 2

4' 2' 0 4' 8'
SCALE: 1/4"=1'-0"

Border name: A1ASL201 Size: 36 x 24
Last Edited: 10/06/05 13:02:14 Last File Name: \\Pegasus\Drawings\Electrical_Stations\Kennett\A27060_-_Disconnect_Switch_Replacement_-_Scott_Holland\E4115-2_KEN.dwg
brian.johnson