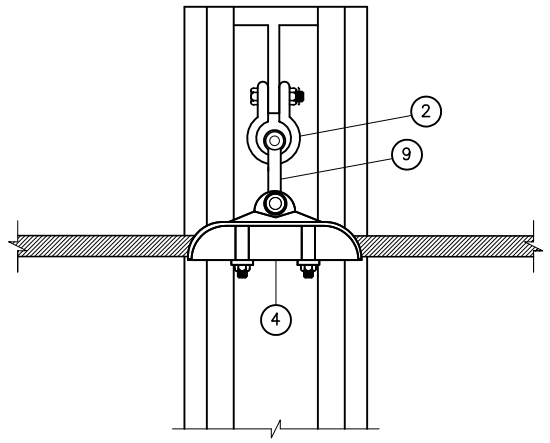

SUSPENSION ASSEMBLY OGW-SL

FOR ATTACHMENT HOLE IN-LINE WITH OGW

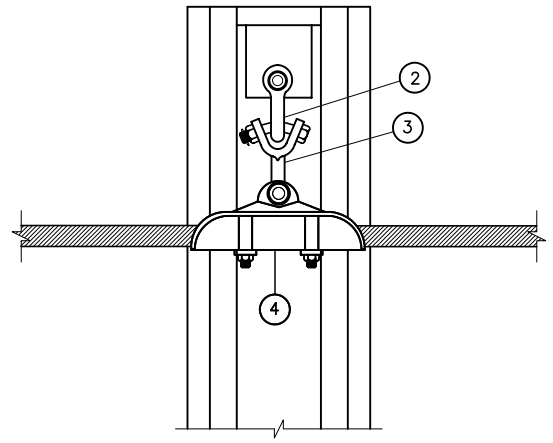

SUSPENSION ASSEMBLY OGW-SP

FOR ATTACHMENT HOLE PERPENDICULAR TO OGW

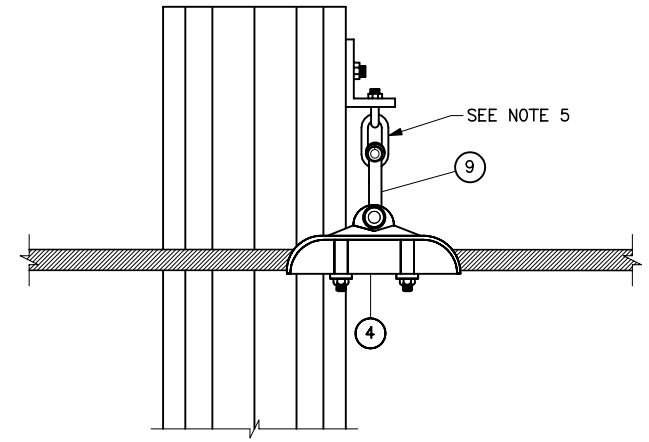

SUSPENSION ASSEMBLY OGW-SH

FOR ATTACHMENT TO STEEL ANGLE

MATERIALS LIST

ITEM NO.	OGW ASSEMBLY QUANTITY								DESCRIPTION
	SL	SP	SH	SYL	SYP	TV	TH	TY	
1				1					Y-CLEVIS CLEVIS, BNK
2	1	1		1	1	2	2	4	ANCHOR SHACKLE, BNK
3		1							Y-CLEVIS EYE 90°, BNK
4	1	1	1	2	2				SUSPENSION CLAMP, BNK
5					1				Y-CLEVIS CLEVIS 90°, BNK
6				2	2				CLEVIS EYE, BNK
7				1	1			1	YOKE PLATE
8						1	1	2	COMPRESSION DEADEND, EYE TYPE
9	1		1						Y-CLEVIS EYE, BNK

NOTES

1. BNK INDICATES BOLT, NUT AND STAINLESS STEEL COTTER KEY REQUIRED.
2. SEE SPECIFICATIONS FOR STRENGTH RATING OF COUPLING HARDWARE.
3. ASSEMBLIES OGW-SYL AND OGW-SYP ARE USED FOR RUNNING ANGLES OF 30° TO 60°.
4. LENGTH OF SUSPENSION CLAMP PLUS 3 INCHES MINIMUM.
5. FURNISHED AS PART OF STRUCTURE.

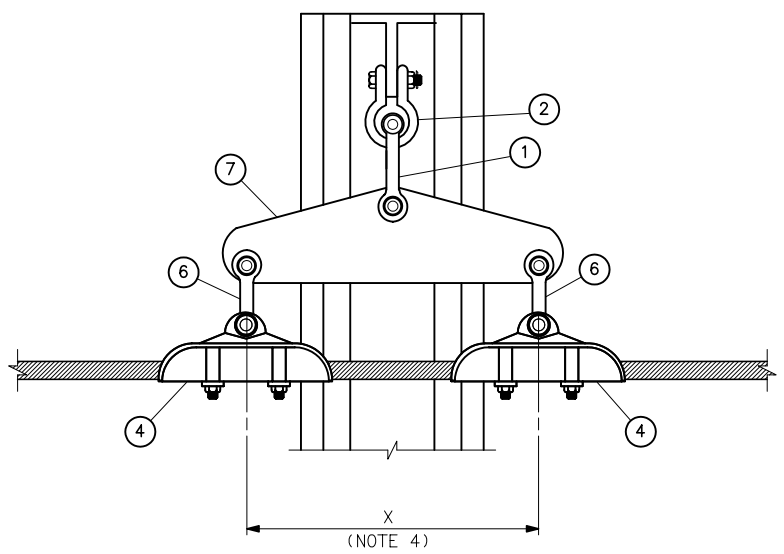

SUSPENSION ASSEMBLY OGW-SYL

FOR ATTACHMENT HOLE IN-LINE WITH OGW

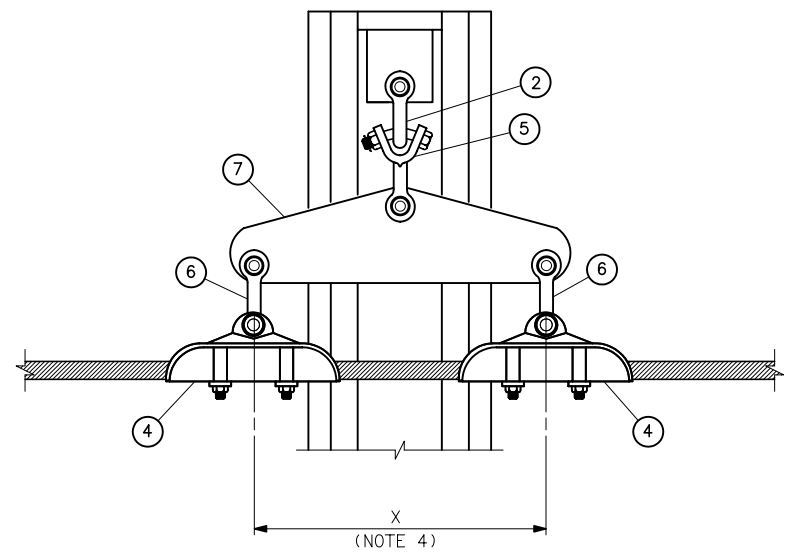

SUSPENSION ASSEMBLY OGW-SYP

FOR ATTACHMENT HOLE PERPENDICULAR TO OGW

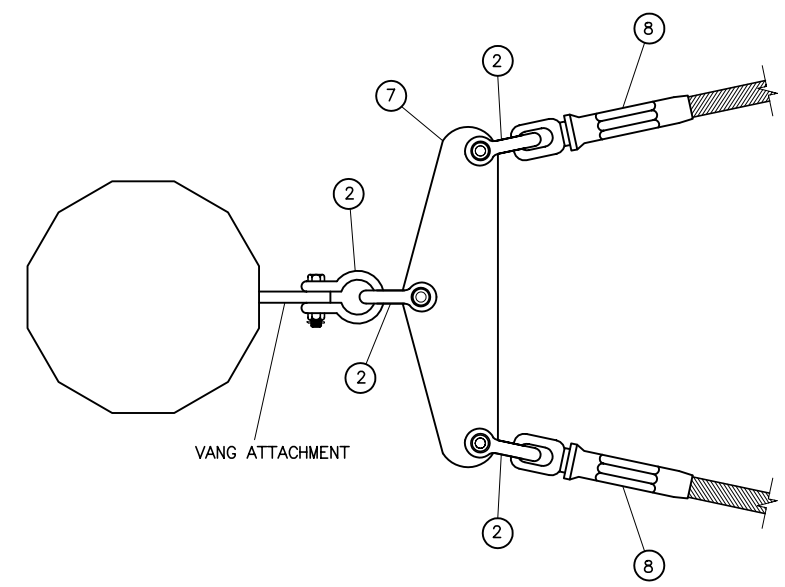

TENSION ASSEMBLY OGW-TY

FOR HORIZONTAL ATTACHMENT HOLE

(OVERHEAD VIEW)

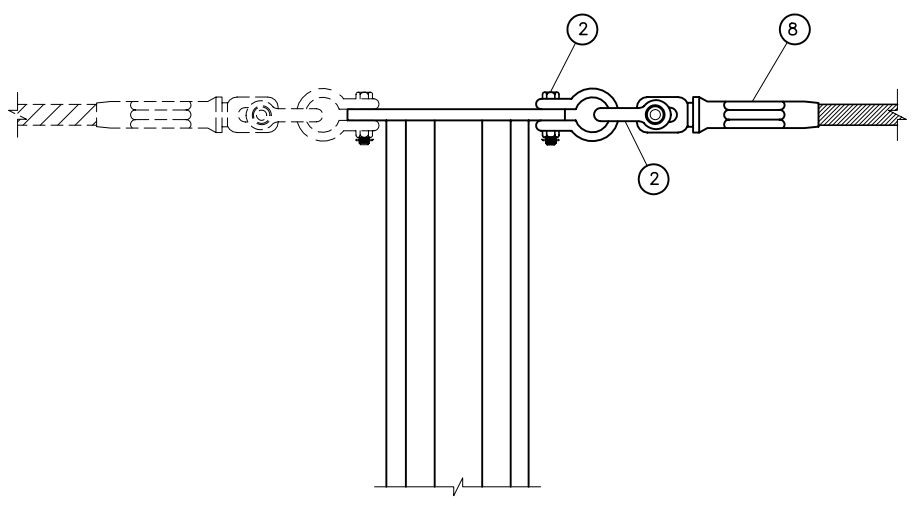

TENSION ASSEMBLY OGW-TV

FOR VERTICAL ATTACHMENT HOLE

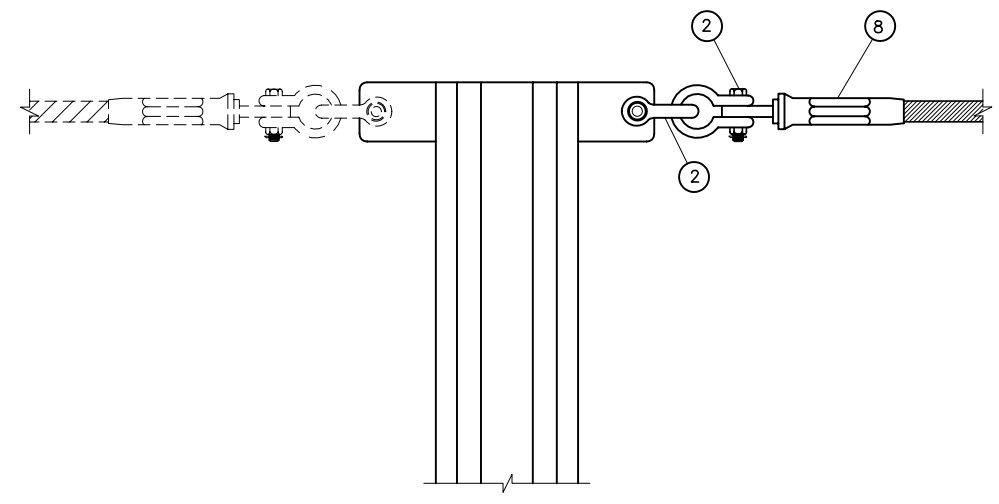

TENSION ASSEMBLY OGW-TH

FOR HORIZONTAL ATTACHMENT HOLE

NOT TO SCALE

C	7-15-03 A7-RC	REVISED TITLE BLOCK ONLY.
B	3-1-00 A3-RMC	MINOR CHANGES.
A	11-20-98 A3-RMC	ATTACHMENT TYPES OGW-SH AND OGW-TY WERE ADDED.

UNITED STATES DEPARTMENT OF ENERGY
WESTERN AREA POWER ADMINISTRATION
CORPORATE SERVICES OFFICE - LAKEWOOD, COLORADO

TRANSMISSION LINE STANDARDS STEEL AND CONCRETE POLE STRUCTURES OVERHEAD GROUND WIRE ASSEMBLY

DESIGNED SRR APPROVED ROSS M. CLARK
CHIEF, TRANSMISSION LINE BRANCH

CAD	NOVEMBER 14, 1995	41	1018

Feb 15, 2005- 9:56am Plotted By: Seela S:\Engineering\Standard Drawings\41\41_1018c.dwg Last Saved By: palmer IMAGES: