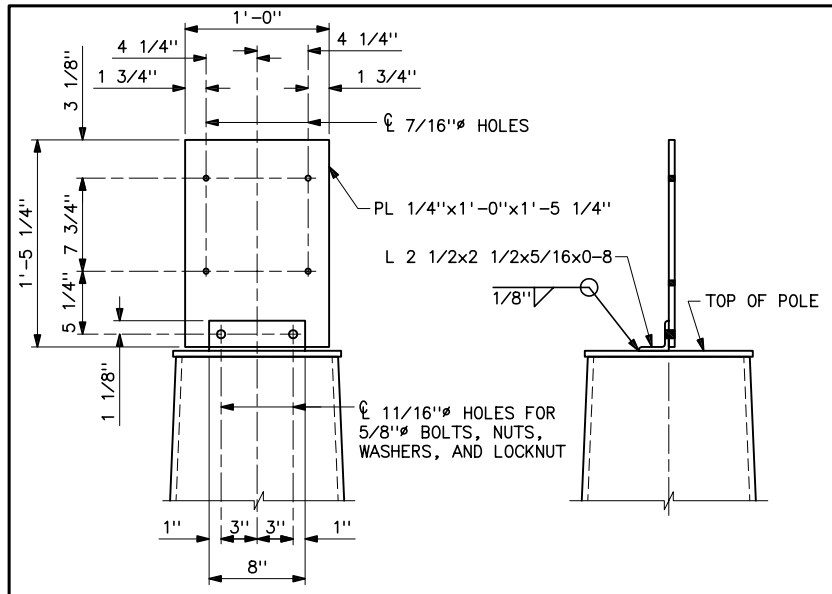

AERIAL PATROL MILE MARKER SIGN MOUNTING PLATE

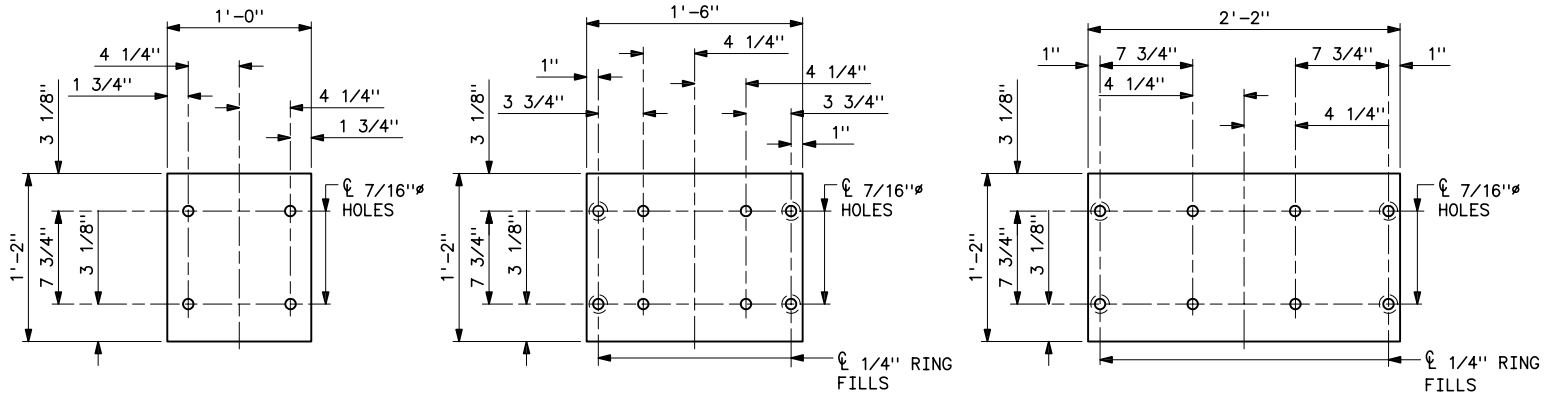

1-DIGIT MILE NUMBER

2-DIGIT MILE NUMBER

3-DIGIT MILE NUMBER

AERIAL PATROL MILE MARKER SIGNS

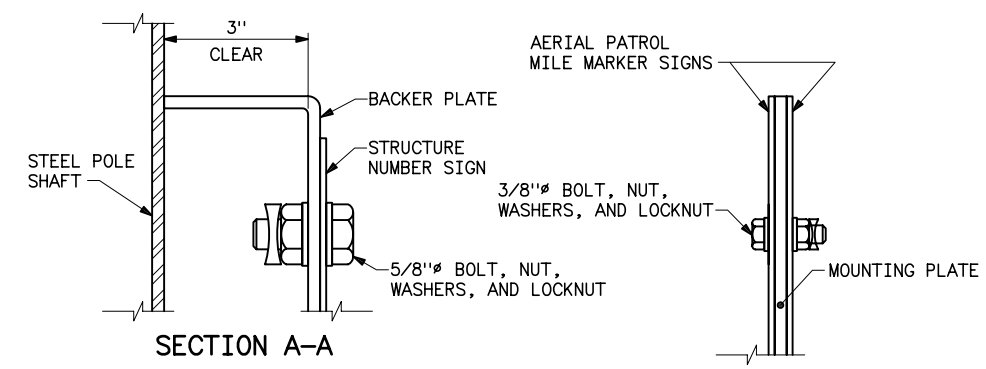

SECTION A-A
STRUCTURE NUMBER SIGN

AERIAL PATROL MILE MARKER SIGN

ATTACHMENT DETAILS

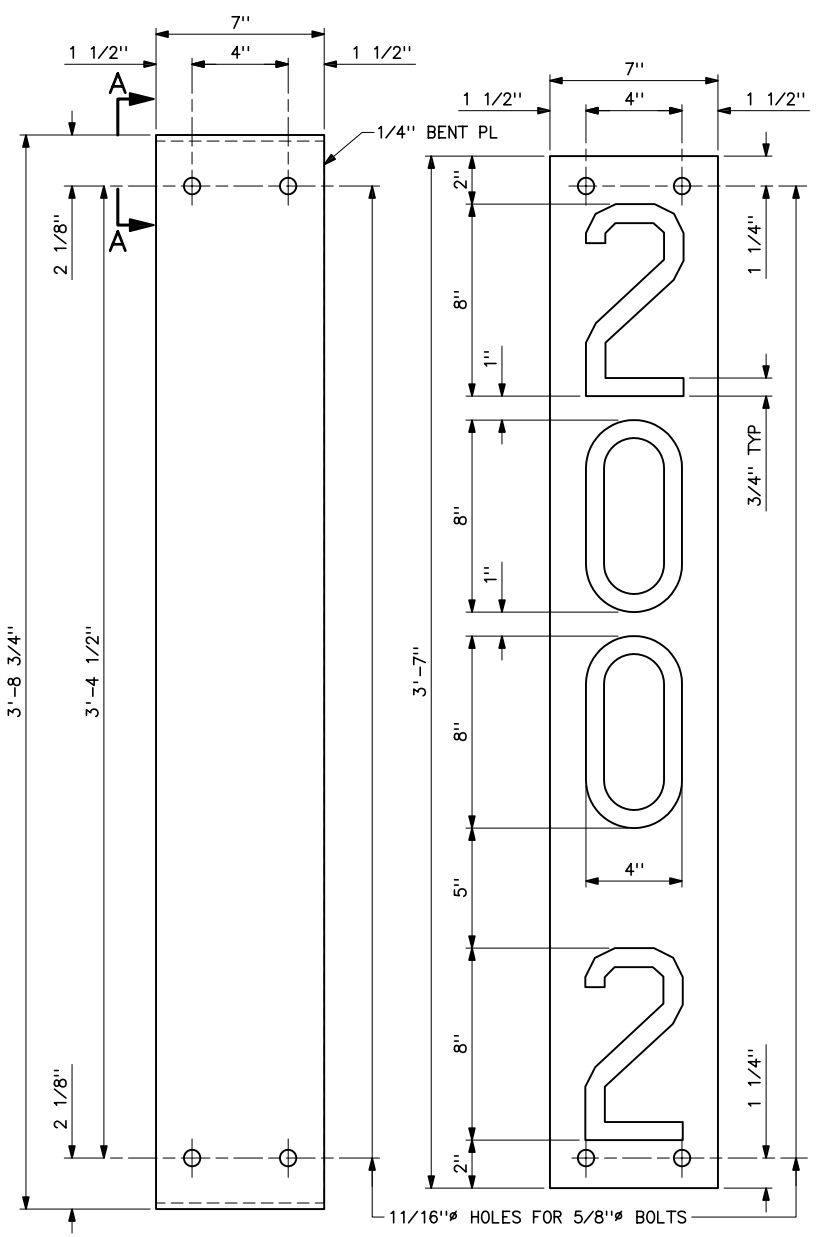

3-DIGIT MILE NUMBER

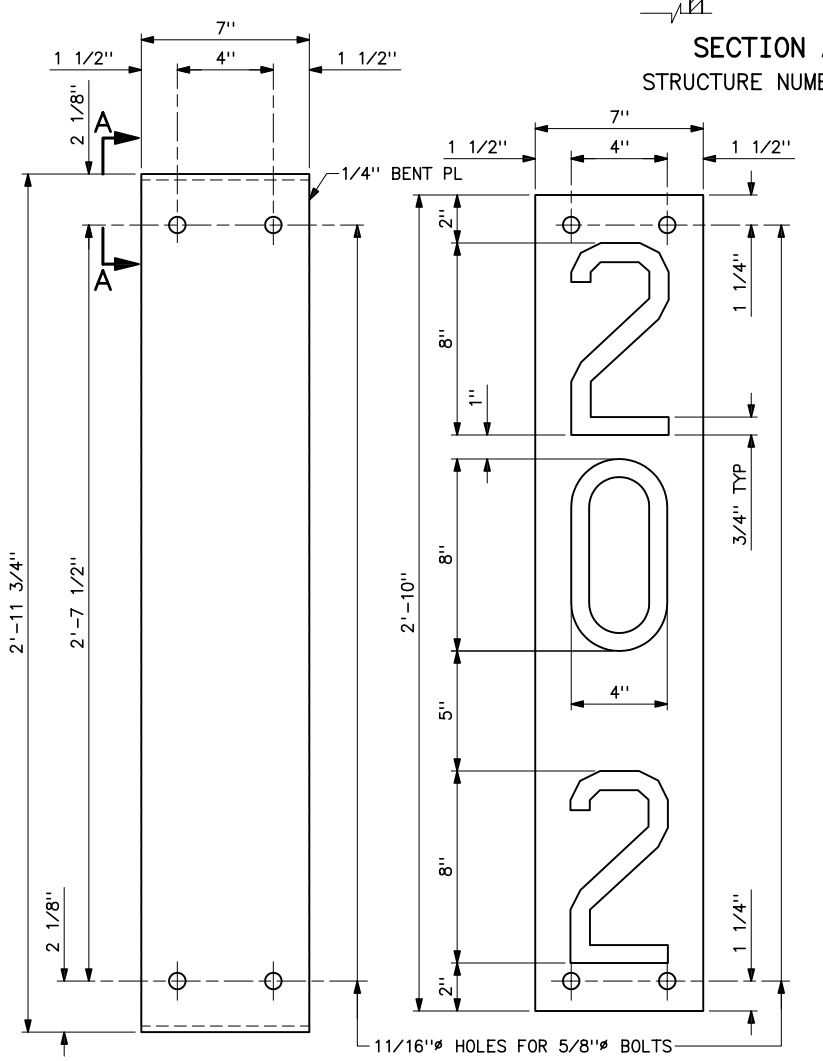

1-AND 2-DIGIT MILE NUMBERS

STRUCTURE NUMBER SIGNS, LETTER DIMENSIONS, AND BACKER PLATES
(NOTE 11)

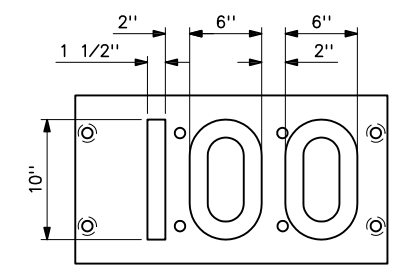

LETTERING TO BE CENTERED HORIZONTALLY AND VERTICALLY

AERIAL PATROL MILE MARKER SIGN LETTER DIMENSIONS

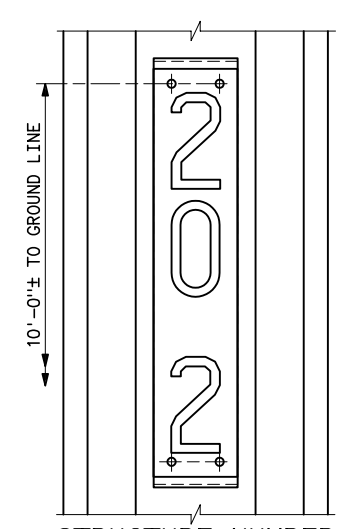

STRUCTURE NUMBER SIGN LOCATION
(NOT TO SCALE)

NOTES

1. SIGN SHALL BE NO 18 U.S. GAGE SHEET STEEL.
2. FINISH FOR SIGN SHALL BE PORCELAIN ENAMEL. BACKGROUND COLOR SHALL BE YELLOW AND FIGURES SHALL BE BLACK.
3. PORCELAIN ENAMEL SHALL BE IN ACCORDANCE WITH THE RECOMMENDED STANDARDS FOR MANUFACTURE OF PORCELAIN ENAMEL SIGNS (PEI: S-103) OF THE SIGN DIVISION OF THE PORCELAIN ENAMEL INSTITUTE, INC.
4. FIGURES SHALL BE "BLOCK" TYPE.
5. HOLES IN SIGNS SHALL BE FURNISHED AND FITTED WITH BRASS EYELETS.
6. AERIAL PATROL MILE MARKER SIGN MOUNTING PLATES AND ANGLES WELDED TO GALVANIZED STEEL POLES SHALL CONFORM TO ASTM A 36 AND SHALL BE GALVANIZED.
7. ANGLE WELDED TO WEATHERING STEEL POLES SHALL CONFORM TO ASTM A 242 OR ASTM A 588.
8. STRUCTURE NUMBER SIGN BACKER PLATES SHALL BE THE SAME TYPE OF MATERIAL AND FINISH AS THE STEEL POLE.
9. INSTALL TWO AERIAL PATROL MILE MARKER SIGNS ON THE FIRST STRUCTURE OF EACH MILE SECTION. MOUNTING PLATE SHALL BE PERPENDICULAR TO THE DIRECTION OF THE TRANSMISSION LINE. MOUNTING SIGNS BACK-TO-BACK ON MOUNTING PLATE. LOCATION AND MOUNTING DETAILS MAY BE VARIED SLIGHTLY TO SUIT CONDITIONS.
10. INSTALL STRUCTURE NUMBER SIGNS ON BOTH THE AHEAD AND BACK SPAN SIDE OF EACH STRUCTURE.
11. FOR STRUCTURE NUMBER SIGNS REQUIRING 5 DIGITS; E.G., 135/2A, DIMENSIONS FOR FIGURES SHALL BE 4" WIDE BY 6 1/4" HIGH IN LIEU OF 4" WIDE BY 8" HIGH. 5-DIGIT SIGN DIMENSIONS SHALL BE IN ACCORDANCE WITH THE 3-DIGIT MILE NUMBER DETAIL.

D	12-13-05 A7-BGH	REVISED STRUCTURE NUMBER SIGN BACKER PLATES AND NOTES.
C	7-15-03 A7-RC	REVISED TITLE BLOCK ONLY.
B	11-30-01 A7-BH	CLARIFIED NOTE 8, ADDED NOTE 10.
A	12-15-95 A2-RMC	REVISED MOUNTING PLATE DETAILS AND NOTES. ADD STRUCTURE NUMBER SIGN ATTACHMENT DETAIL.

UNITED STATES DEPARTMENT OF ENERGY
WESTERN AREA POWER ADMINISTRATION
CORPORATE SERVICES OFFICE - LAKEWOOD, COLORADO

TRANSMISSION LINE STANDARDS
STEEL POLE STRUCTURES
AERIAL PATROL MILE MARKER AND NUMBER SIGNS

DESIGNED BOBBY HAGLER APPROVED ROSS CLARK
CHIEF, TRANSMISSION LINE BRANCH

A/E	AUGUST 30, 1995	41	9027

Dec 15, 2005- 1:31pm Plotted By:Seela IMAGES:
P:\ACAD_DWG\SteelPoles\41_9027d.dwg Last Saved By: TAS on Dec 14, 2005- 2:27pm