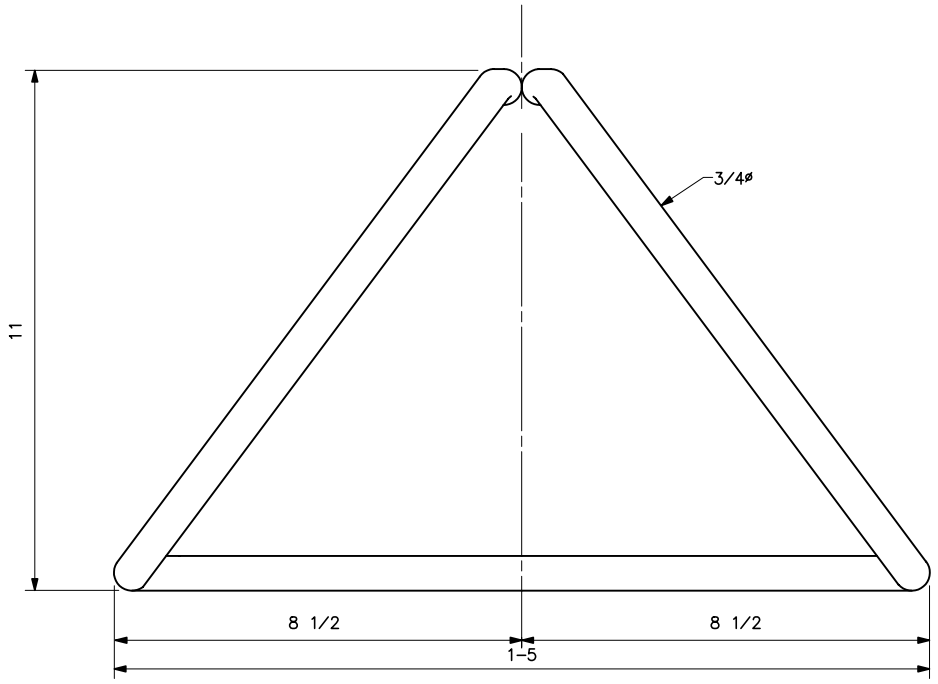

PLAN

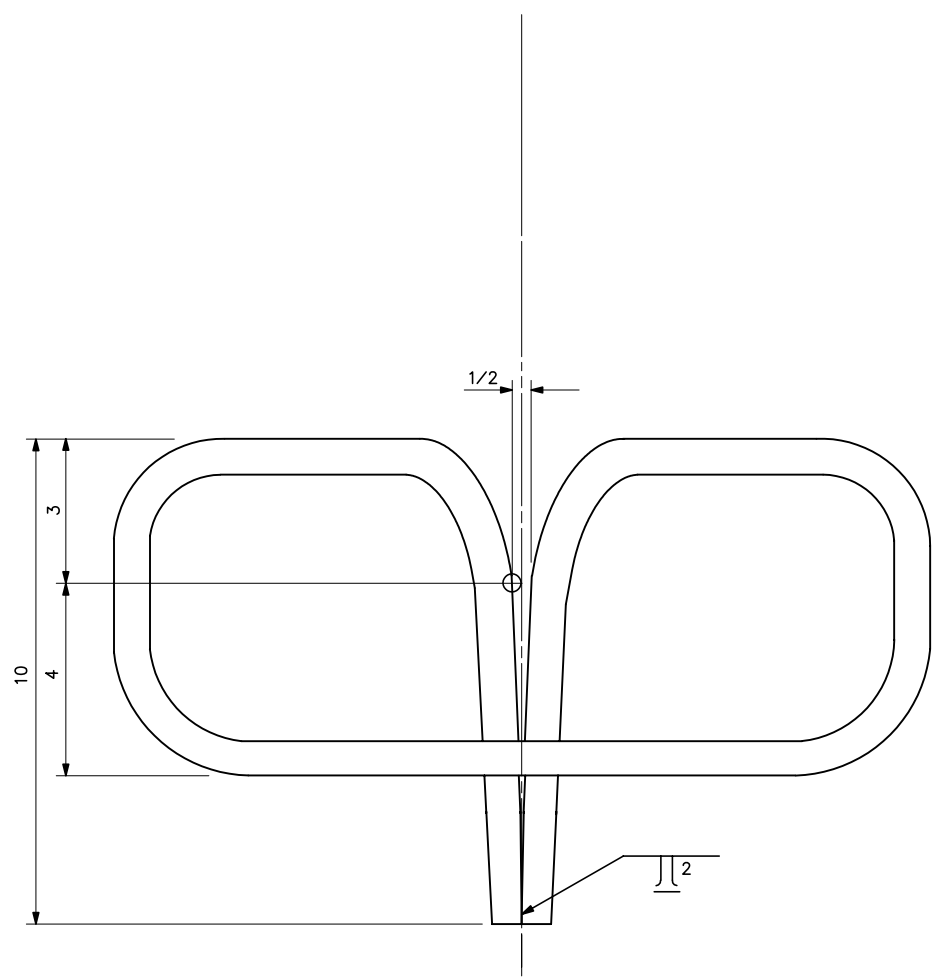

ELEVATION

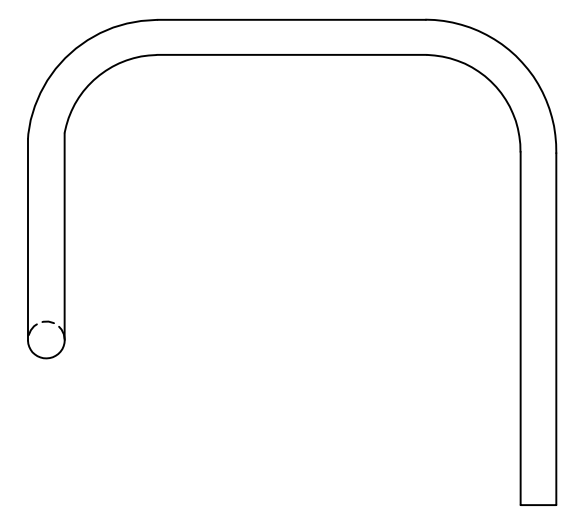

SIDE VIEW

NOTES

1. GALVANIZE MATERIAL AFTER FABRICATION.
2. MINIMUM INSIDE COLD BENDING RADIUS : 2 1/4 INCHES.

REFERENCE DRAWINGS

MAINTENANCE PROVISIONS
OUTLINES_____43 2204 THRU 2209
DETAILS_____43 2202 & 2210

B	7-15-03 A7-DH	REVISED TITLE BLOCK ONLY.
A	7-10-92 A2-WCC	REVISED REFERENCE DRAWINGS

UNITED STATES DEPARTMENT OF ENERGY
WESTERN AREA POWER ADMINISTRATION
CORPORATE SERVICES OFFICE - LAKEWOOD, COLORADO

TRANSMISSION LINE STRUCTURE STANDARDS
STEEL POLE STRUCTURES
MAINTENANCE PROVISIONS-WORK RING

DESIGNED B.C. HAGLER _____ APPROVED W.C. COWAN _____
DIRECTOR, DIVISION OF TRANSMISSION LINE AND BUILDING DESIGN

A	MARCH 31, 1989	43	2203

Feb 15, 2005- 10:07am Plotted By: Seela S:\Engineering\Standard Drawings\43\43_2203b.dwg Last Saved By: palmer IMAGES: