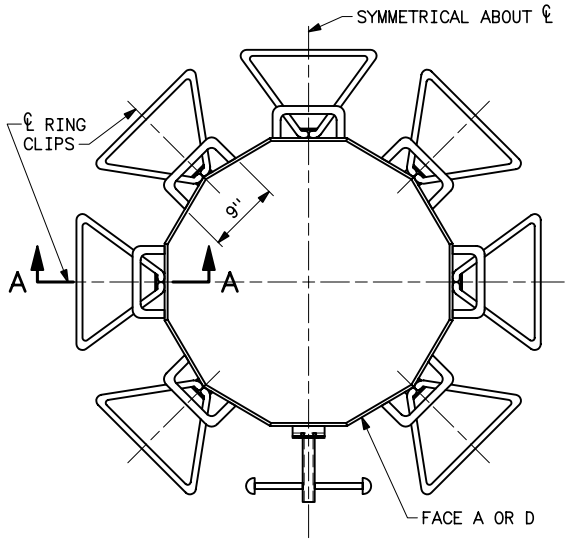

POLE DIAMETER > 36"

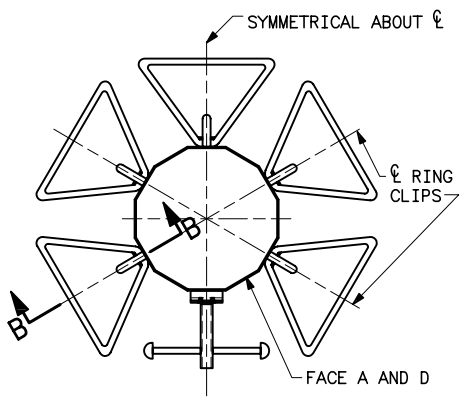

POLE DIAMETER ≤ 36"

TYPICAL BELT LOOP AND WORK RING PLANS

(NOTE 4)

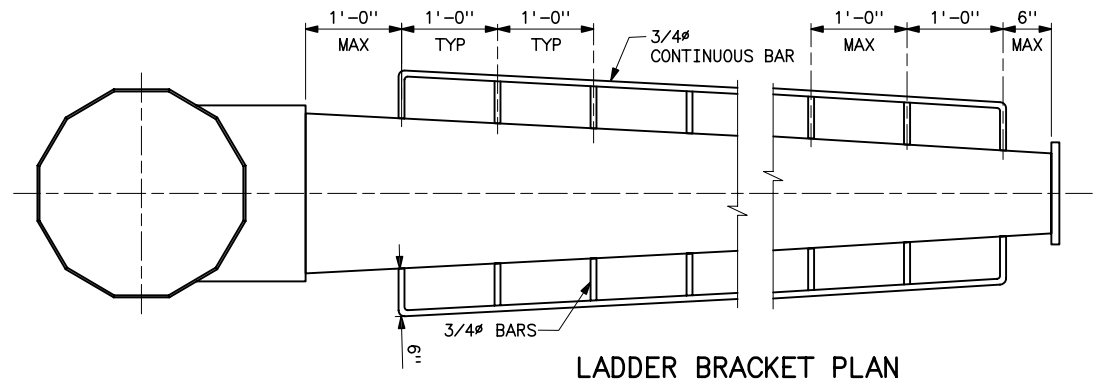

LADDER BRACKET PLAN

FOR DAVIT ARMS LONGER THAN 3'-0"

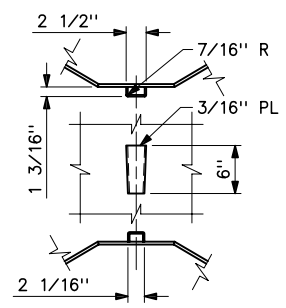

RING CLIP

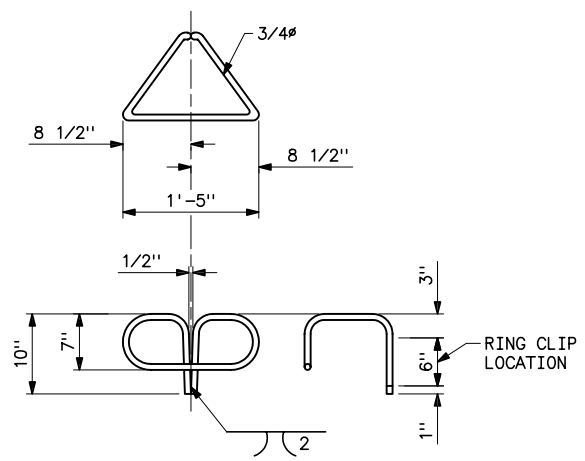

WORK RING

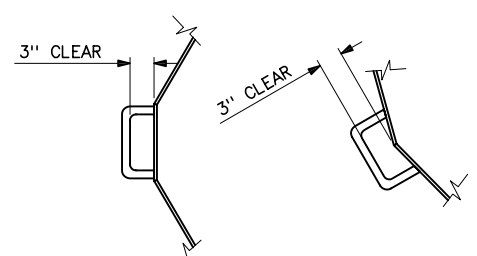

CLEARANCE FOR HAND AND BELT LOOPS

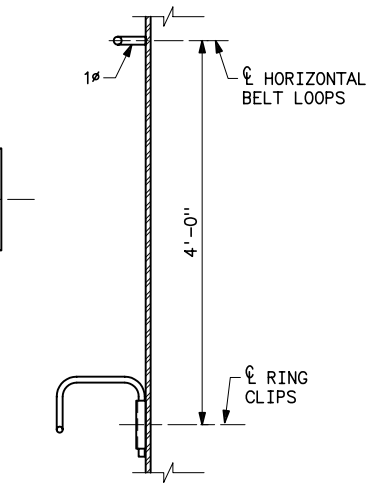

SECTION A–A

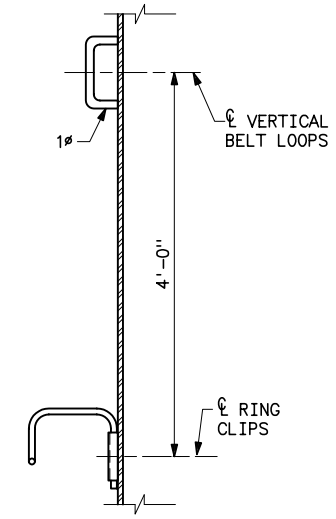

SECTION B–B

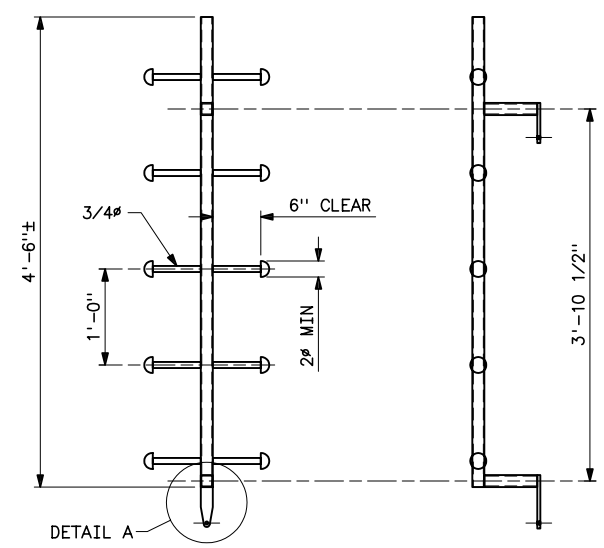

REMOVABLE CLIMBING RING SECTION

NOTES

1. MINIMUM INSIDE COLD BENDING RADII (INCHES):
   3/4"ø BAR=2 1/4"
   1"ø BAR=3"
2. WELDS TO ATTACH MAINTENANCE PROVISIONS TO STRUCTURES SHALL DEVELOP THE ULTIMATE TENSILE STRENGTH OF THE ATTACHED PART.
3. DISTANCE FROM STEPS TO FACE OF POLE SHAFTS SHALL BE THE SAME FOR FIXED CLIMBING RUNG SECTIONS AND REMOVABLE CLIMBING RUNG SECTIONS.
4. PROVIDE ONE BELT LOOP ABOVE EACH RING CLIP.
5. FIXED CLIMBING RUNG SECTIONS LOCATED ACROSS SLIP JOINTS SHALL BE DESIGNED TO ACCOMMODATE VERTICAL MOVEMENT OF THE SLIP JOINTS.
6. FIXED CLIMBING RUNG SECTIONS SHALL BE SPLICED TOGETHER TO FORM A CONTINUOUS CENTER SUPPORT FOR THE FULL HEIGHT OF THE STRUCTURE. SPLICES SHALL BE DESIGNED TO ENSURE FULL STRUCTURAL CONTINUITY OF THE CENTER SUPPORT.
7. TOP OR BOTTOM CANTILEVERED EXTENSIONS OF FIXED CLIMBING RUNG SECTIONS SHALL NOT EXTEND MORE THAN 2 FEET BEYOND THE NEAREST CLIP.
8. FOR WEATHERING-STEEL STRUCTURES, AFTER INSTALLING FIXED AND INCLINED CLIMBING RUNG SECTIONS WITH BOLTS, NUTS, AND LOCKNUTS, SPOT WELD THE RUNG SECTION MOUNTING PLATES TO THE CLIPS ON THE POLE SHAFTS. WELDING SHALL BE SUFFICIENT TO PROVIDE ELECTRICAL CONTINUITY BETWEEN CLIMBING RUNG SECTIONS AND THE POLE SHAFT.
9. ALTERNATIVE METHODS FOR ATTACHING FIXED AND INCLINED CLIMBING RUNG SECTIONS MAY BE SUBMITTED FOR APPROVAL.

REFERENCE DRAWINGS

MAINTENANCE PROVISIONS–
WORK RING _____ 43 2203
OUTLINES _____ 2206 THRU 2209

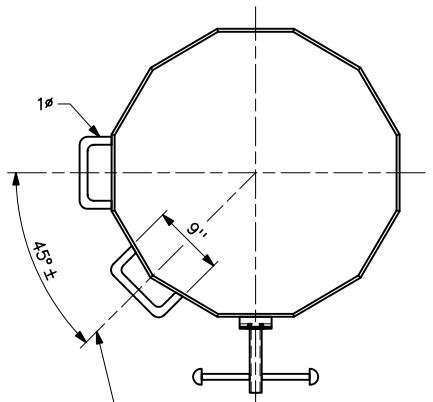

POLE DIAMETER > 36"

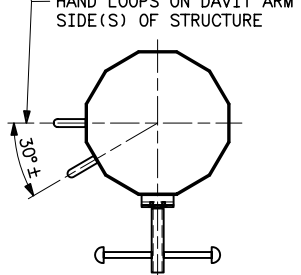

HAND LOOPS ON DAVIT ARM SIDE(S) OF STRUCTURE

POLE DIAMETER ≤ 36"

HAND LOOP PLANS

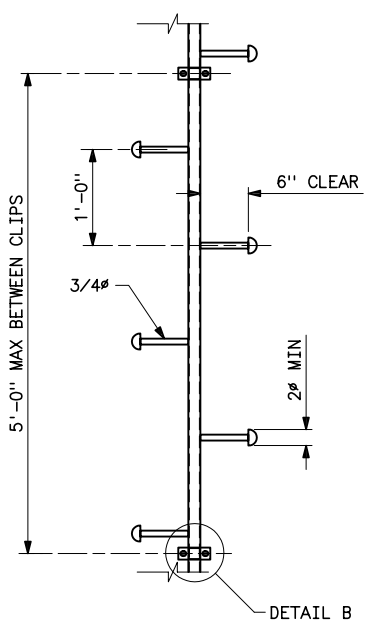

FIXED CLIMBING RUNG SECTION

(NOTES 6 AND 7)

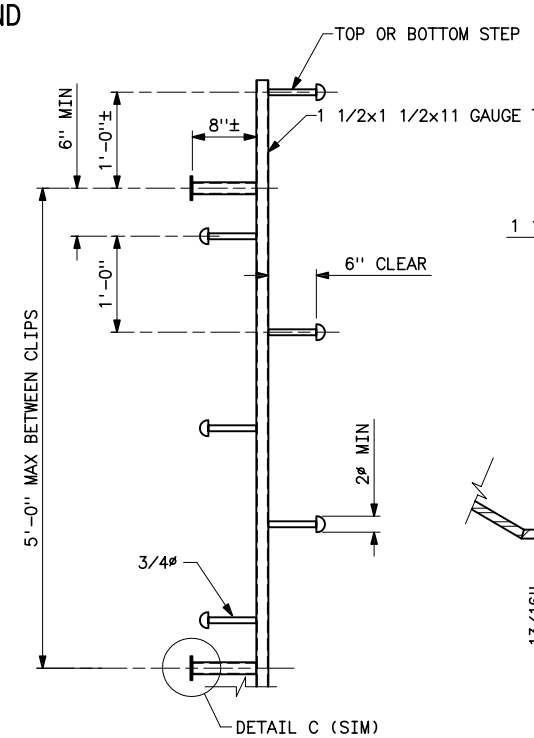

INCLINED CLIMBING RUNG SECTION

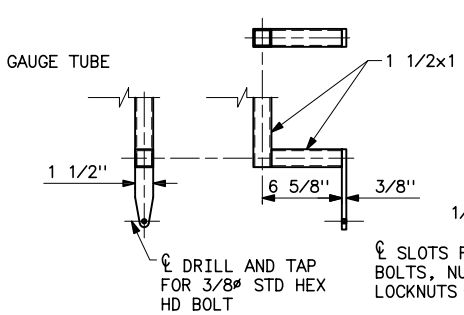

DETAIL A

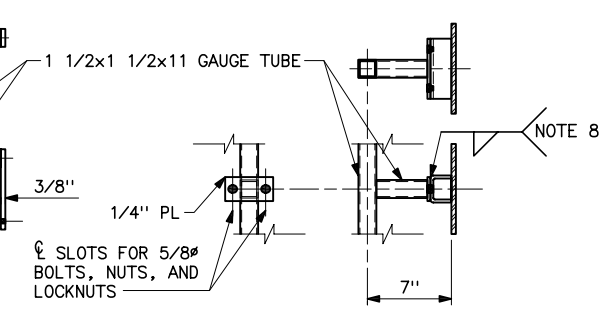

DETAIL B
DETAIL C (SIMILAR)

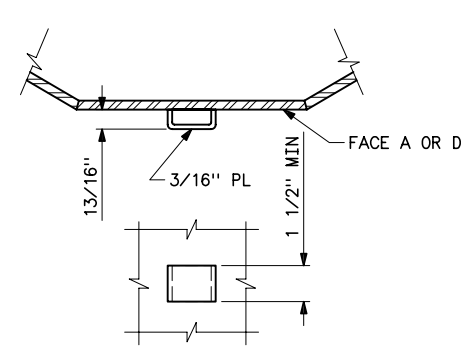

CLIP FOR REMOVABLE CLIMBING RUNG SECTIONS

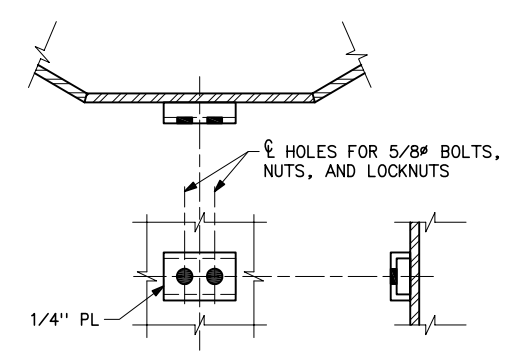

CLIP FOR FIXED AND INCLINED CLIMBING RUNG SECTIONS

(NOTE 9)

H	12-22-05 A7-BH	REVISED LADDER BRACKET PLAN.
G	7-15-03 A7-DH	REVISED TITLE BLOCK ONLY.
F	10-28-02 A7-BGH	REDRAWN. ADDED NOTES 6, 7, AND 9. MINOR REVISIONS.

UNITED STATES DEPARTMENT OF ENERGY
WESTERN AREA POWER ADMINISTRATION
CORPORATE SERVICES OFFICE – LAKEWOOD, COLORADO

TRANSMISSION LINE STRUCTURE STANDARDS
STEEL POLE STRUCTURES
MAINTENANCE PROVISIONS – DETAILS

DESIGNED BOBBY HAGLER APPROVED DOUG HANSON CIVIL ENGINEERING MANAGER

CAE	OCTOBER 28, 2002	43	2210

Dec 22, 2005- 1:39pm Plotted By:dhagler IMAGES:
S:\Projects\StandardDrawings\Find\A3_2210h.dwg Last Saved By: B. Hagler on Dec 22, 2005- 2:43pm