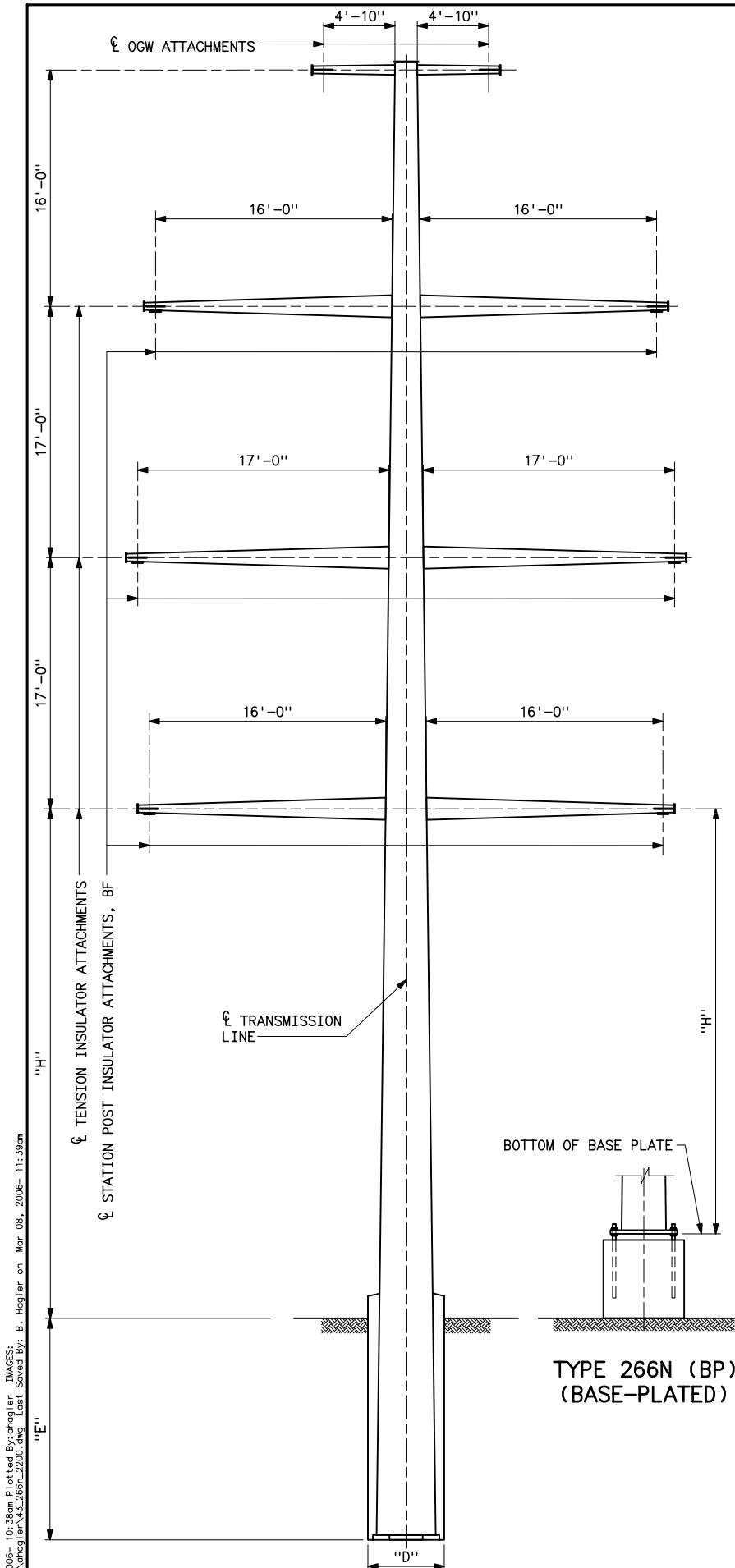


TYPE 266N (DE)
(DIRECT-EMBEDDED)




TYPE 266N (BP)
(BASE-PLATED)

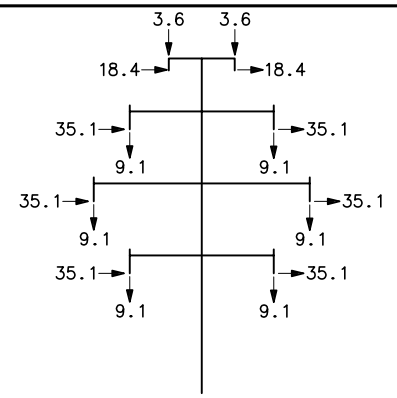


CASE A – NESC
HEAVY INTACT
WIND ON STRUCTURE = 10 PSF
DEAD LOAD OF STRUCTURE x 1.5

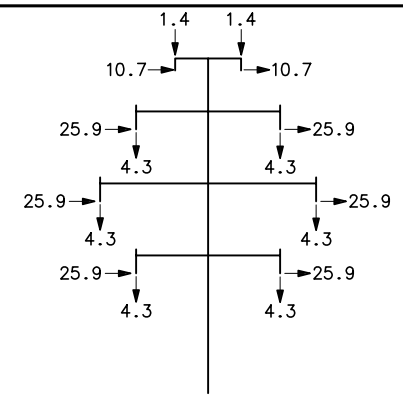


CASE B – HIGH
WIND INTACT
WIND ON STRUCTURE = 31 PSF
DEAD LOAD OF STRUCTURE x 1.15

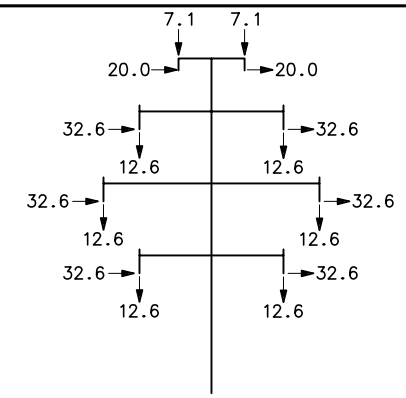


CASE C – RIME ICE
INTACT
WIND ON STRUCTURE = 5 PSF
DEAD LOAD OF STRUCTURE x 1.1

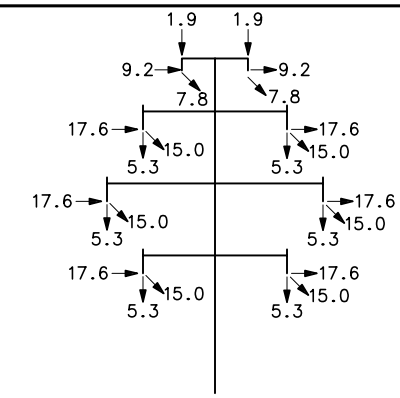


CASE D – NESC
HEAVY DEADEND
95° LINE ANGLE
WIND ON STRUCTURE = 10 PSF
DEAD LOAD OF STRUCTURE x 1.5

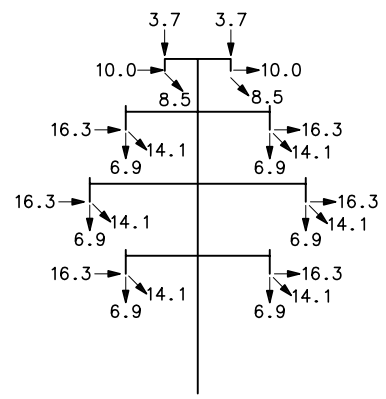


CASE E – RIME ICE
DEADEND
95° LINE ANGLE
WIND ON STRUCTURE = 5 PSF
DEAD LOAD OF STRUCTURE x 1.1

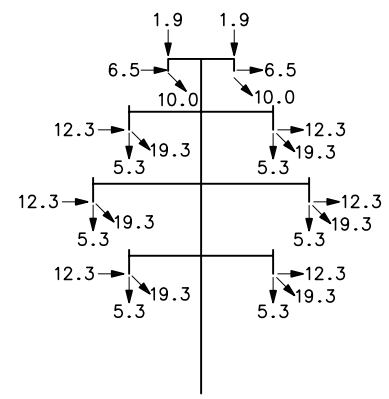


CASE F – NESC
HEAVY DEADEND
60° LINE ANGLE
WIND ON STRUCTURE = 10 PSF
DEAD LOAD OF STRUCTURE x 1.5

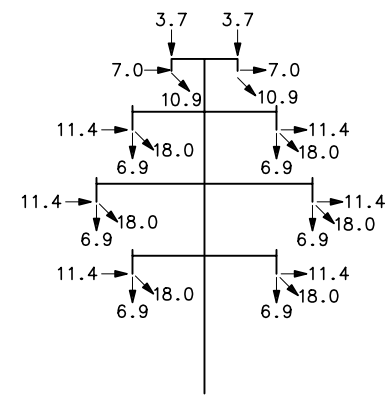


CASE G – RIME ICE
DEADEND
60° LINE ANGLE
WIND ON STRUCTURE = 5 PSF
DEAD LOAD OF STRUCTURE x 1.1

## NOTES

1. LOADS ARE ULTIMATE VALUES AND INCLUDE OVERLOAD FACTORS.
2. WIRE LOADS ARE IN KIPS AND ARE TOTAL FOR ALL SPANS.
3. STRUCTURE AND ATTACHMENTS SHALL BE DESIGNED FOR THE SIMULTANEOUS APPLICATION OF DEAD LOAD, WIND ON THE STRUCTURE, AND WIRE LOADS FOR EACH LOADING CASE. STRUCTURE DESIGN SHALL ACCOUNT FOR TRANSVERSE WIRE AND WIND LOADS BEING APPLIED IN EACH DIRECTION; I.E., LEFT OR RIGHT.
4. STRUCTURE SHALL BE DESIGN SELF SUPPORTING; GUYS ARE NOT PERMITTED.
5. WIND PRESSURE SHOWN ON LOADING DIAGRAMS ARE BASED ON A SHAPE FACTOR OF 1.0 FOR CIRCULAR SECTIONS. FOR SECTIONS OTHER THAN CIRCULAR, MULTIPLY THE PRESSURES BY THE FOLLOWING SHAPE FACTORS:
   ELLIPTICAL=1.2 (MAJOR AXIS)
   0.9 (MINOR AXIS)
   12-SIDED=1.1
   8-SIDED=1.4
   6-SIDED=1.4
   4-SIDED=2.0
6. DESIGN LOADS ARE BASED ON 1272 KCM ACSR 45/7 "BITTERN" CONDUCTOR AND 1/2ø, 7-STRAND, HIGH-STRENGTH STEEL OVERHEAD GROUND WIRES.
7. SUM OF ADJACENT SPANS _____ 2400 FT
8. LOW POINT DISTANCE _____ 2000 FT
9. LINE ANGLE _____ 60-95°
10. NESC HEAVY: 1/2" RADIAL ICE, 4 PSF AT 0°F.
    RULING SPAN _____ 1000 FT
    TENSIONS: CONDUCTOR _____ 13,460 LB
    OGW _____ 6956 LB
11. HIGH WIND: 100 MPH 3-SECOND GUST AT 60°F IN ACCORDANCE WITH NESC C2-2002.
    TENSION: CONDUCTOR _____ 12,912 LB
    OGW _____ 5442 LB
    WIND ON WIRES _____ 26 PSF
12. RIME ICE: 1 1/2" RADIAL RIME (40 PCF), 4 PSF WIND AT 30°F.
    TENSION: CONDUCTOR _____ 18,888 LB
    OGW _____ 11,347 LB
13. "H" INDICATES HEIGHT PORTION OF POLE STRUCTURE DESIGNATIONS LISTED IN SPECIFICATIONS. CONTRACTOR SHALL DETERMINE EMBEDMENT DEPTH "E" AND AUGER DIAMETER "D" BASED ON CRITERIA IN SPECIFICATIONS.

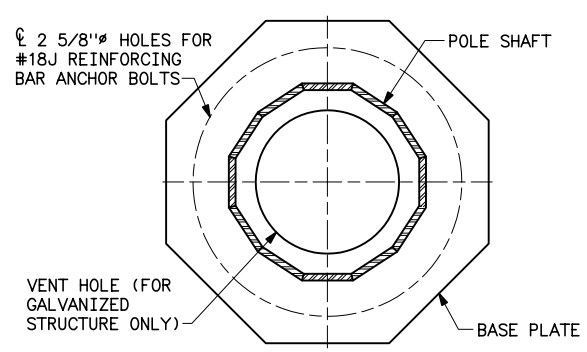


SECTION A-A

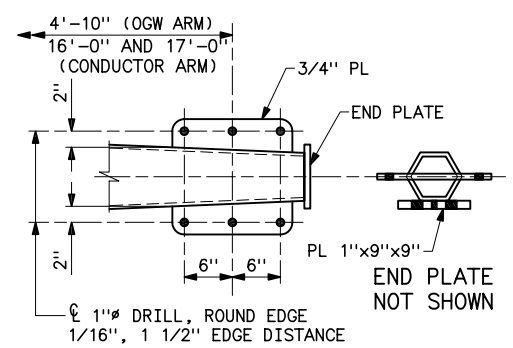


TYPICAL OGW AND TENSION
INSULATOR ATTACHMENT

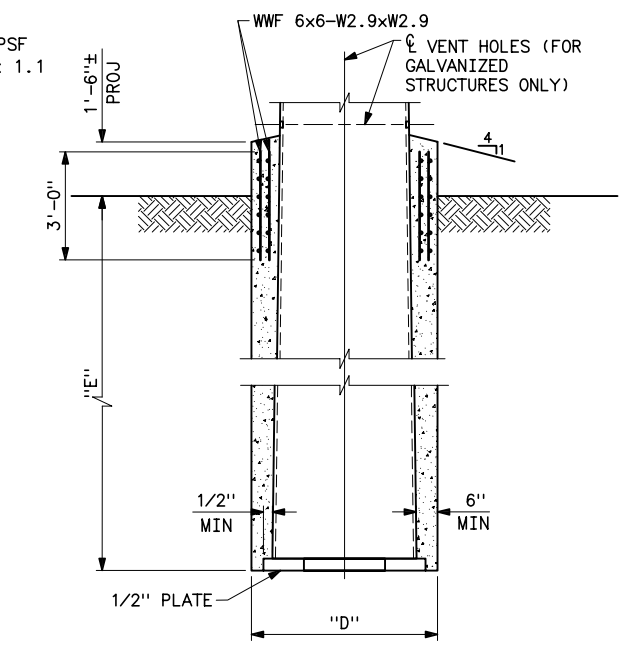


TYPE 266N (DE)
BASE DETAIL

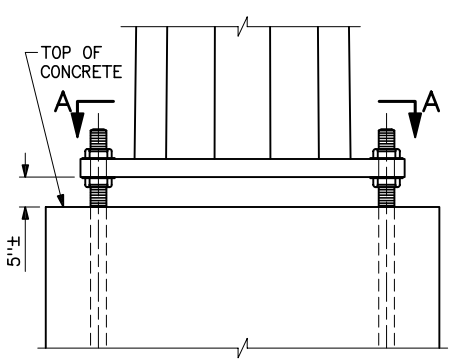


TYPE 266N (BP)
BASE DETAIL

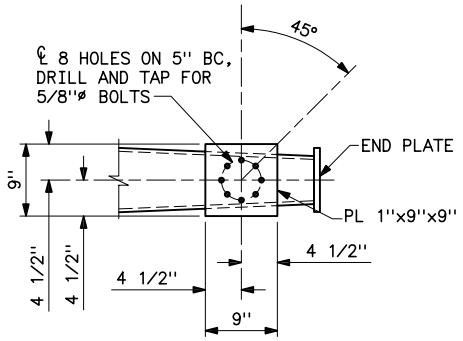


TYPICAL STATION POST
INSULATOR ATTACHMENT

UNITED STATES DEPARTMENT OF ENERGY
WESTERN AREA POWER ADMINISTRATION
CORPORATE SERVICES OFFICE – LAKEWOOD, COLORADO

TRANSMISSION LINE STRUCTURES
266N POLE STRUCTURES
OUTLINE AND DESIGN LOADS

DESIGNED BOBBY HAGLER APPROVED DOUG HANSON
CIVIL ENGINEERING MANAGER

| CAE | SEPTEMBER 16, 2005 | 43-266N | 2200 |
|---|---|---|---|

Jan 25, 2006- 10:38am Plotted By:bhagler IMAGES:
S:\Common\bhagler\43_266n_2200.dwg Last Saved By: B. Hagler on Mar 08, 2006- 11:39am