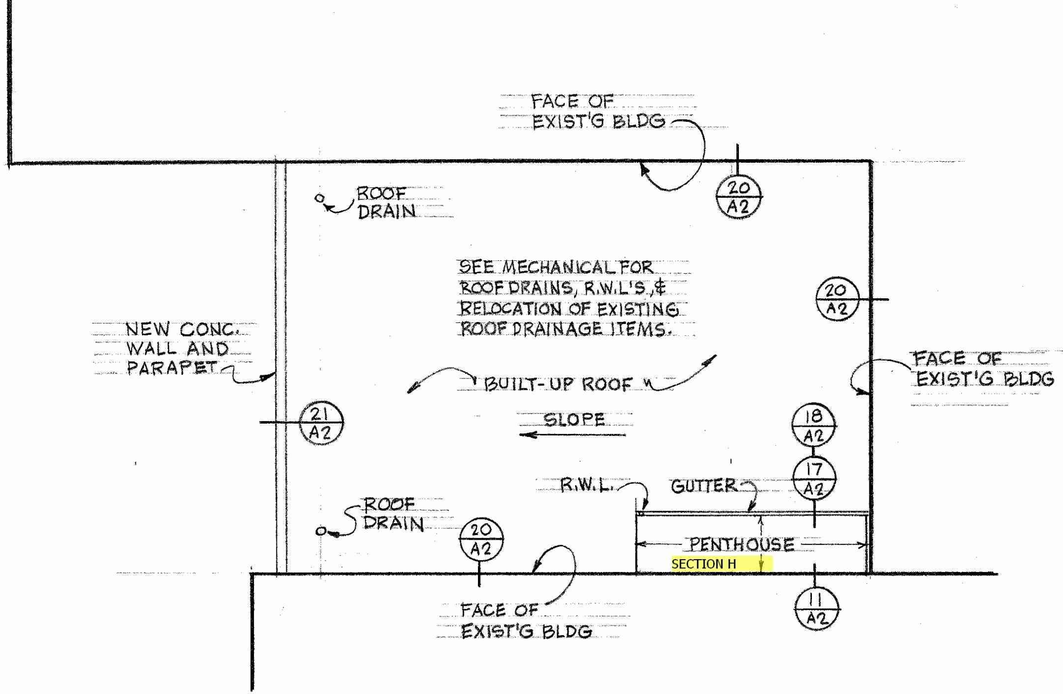

ROOF PLAN

N

SCALE: 1/8" = 1'-0"

0 4' 8"

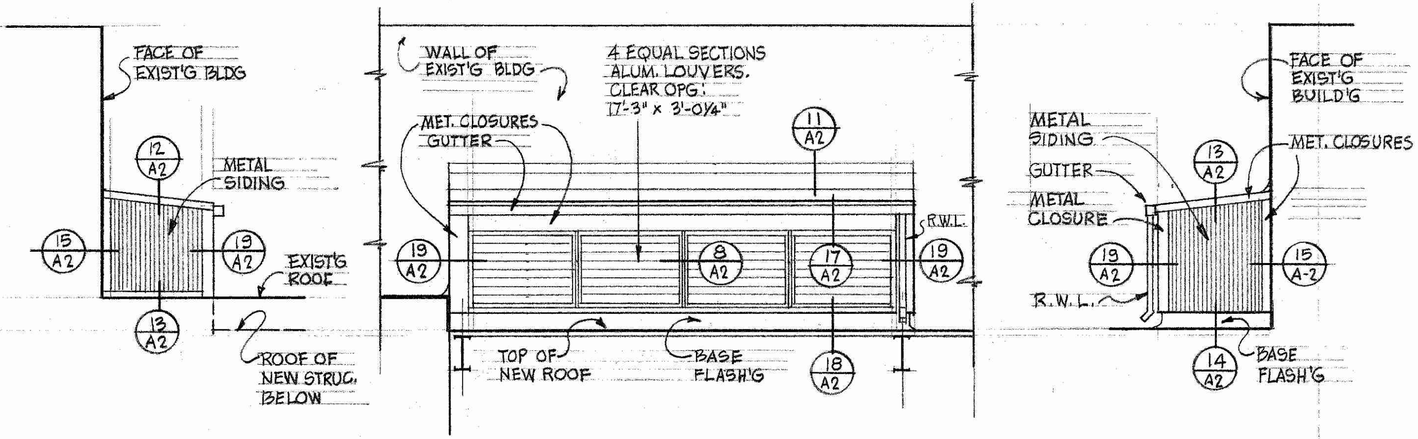

EAST NORTH ELEVATION WEST

PENTHOUSE ELEVATIONS

SCALE: 1/4" = 1'-0" (DUCT PENETRATIONS NOT SHOWN)

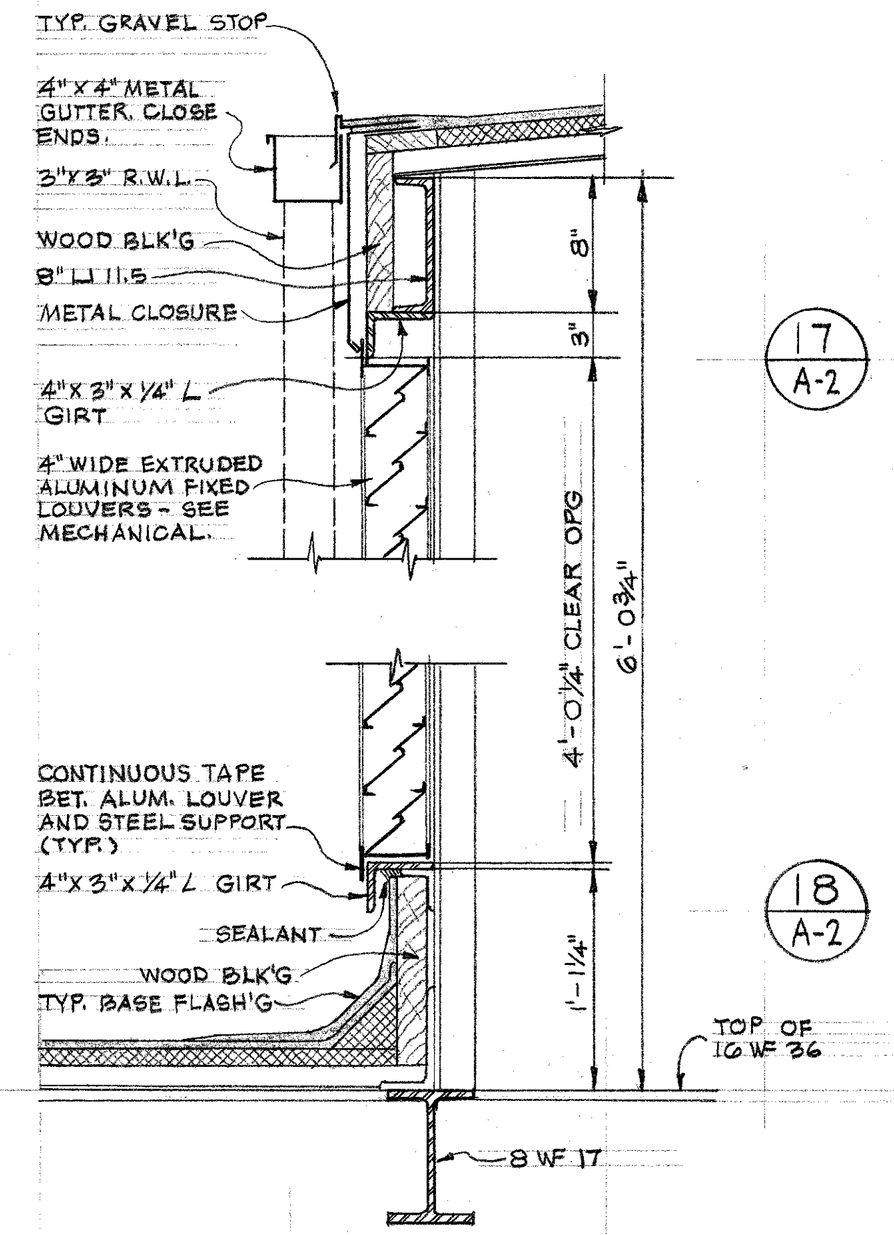

17
A-2

18
A-2

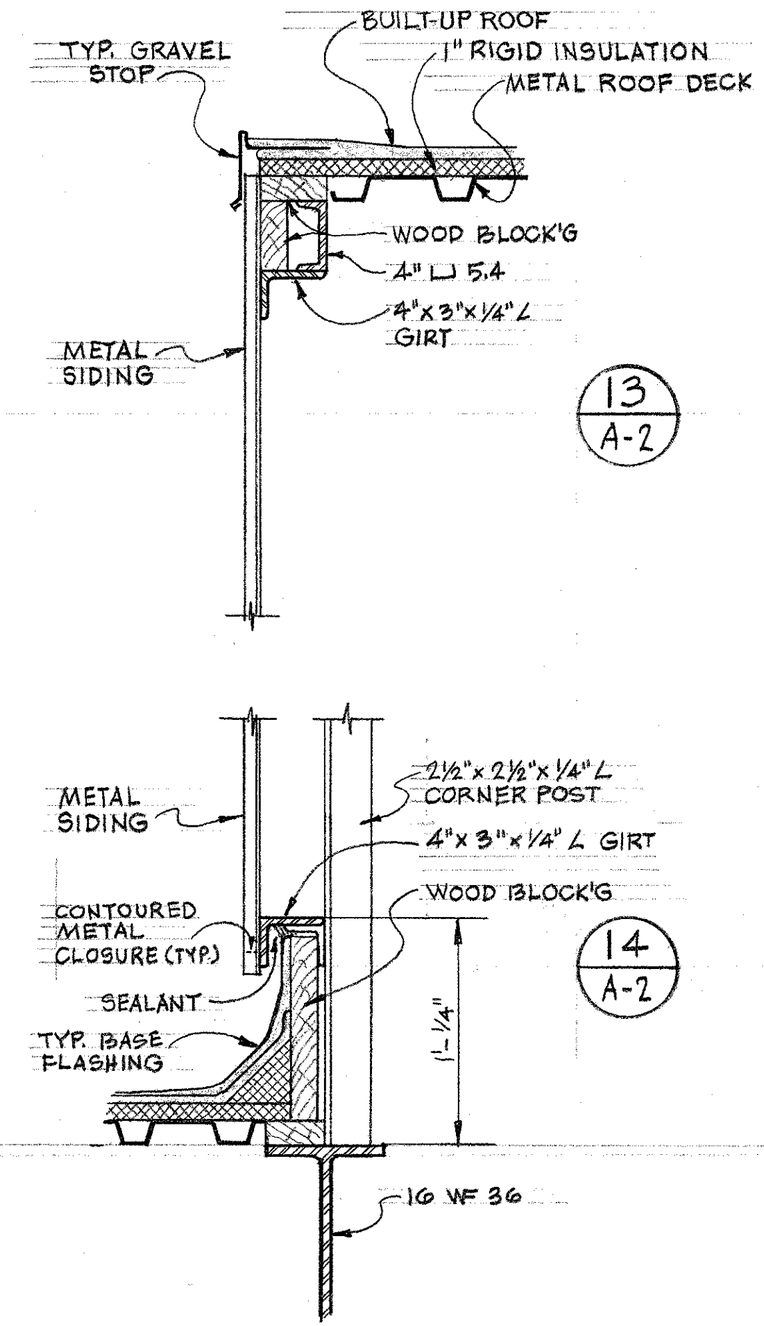

13
A-2

14
A-2

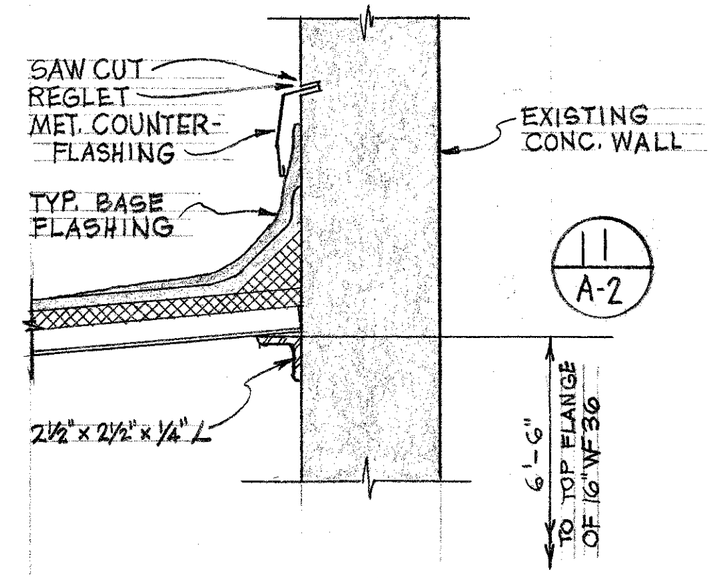

11
A-2

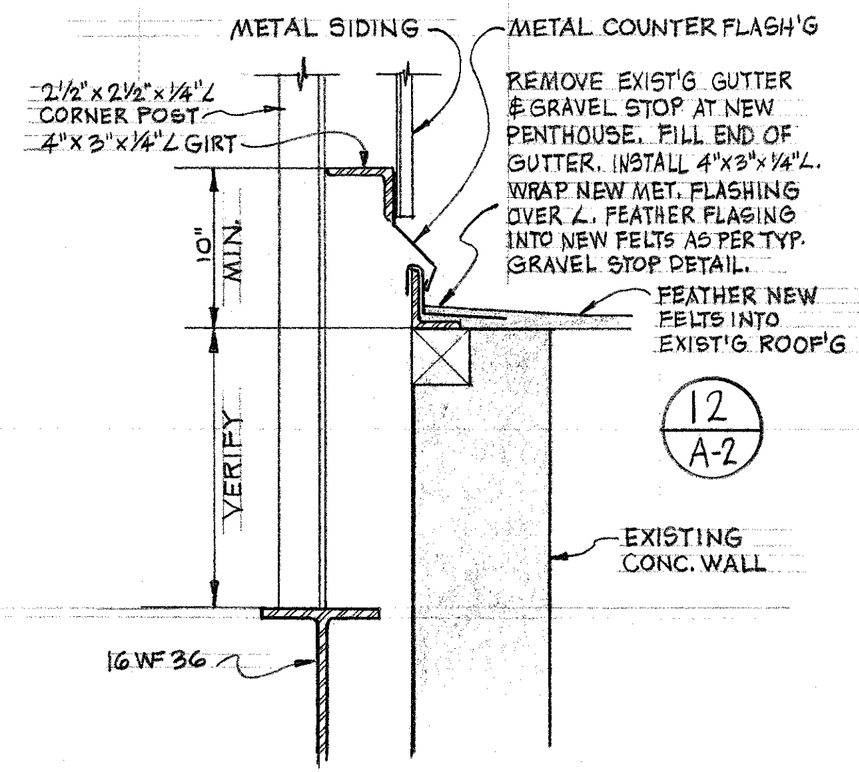

12
A-2

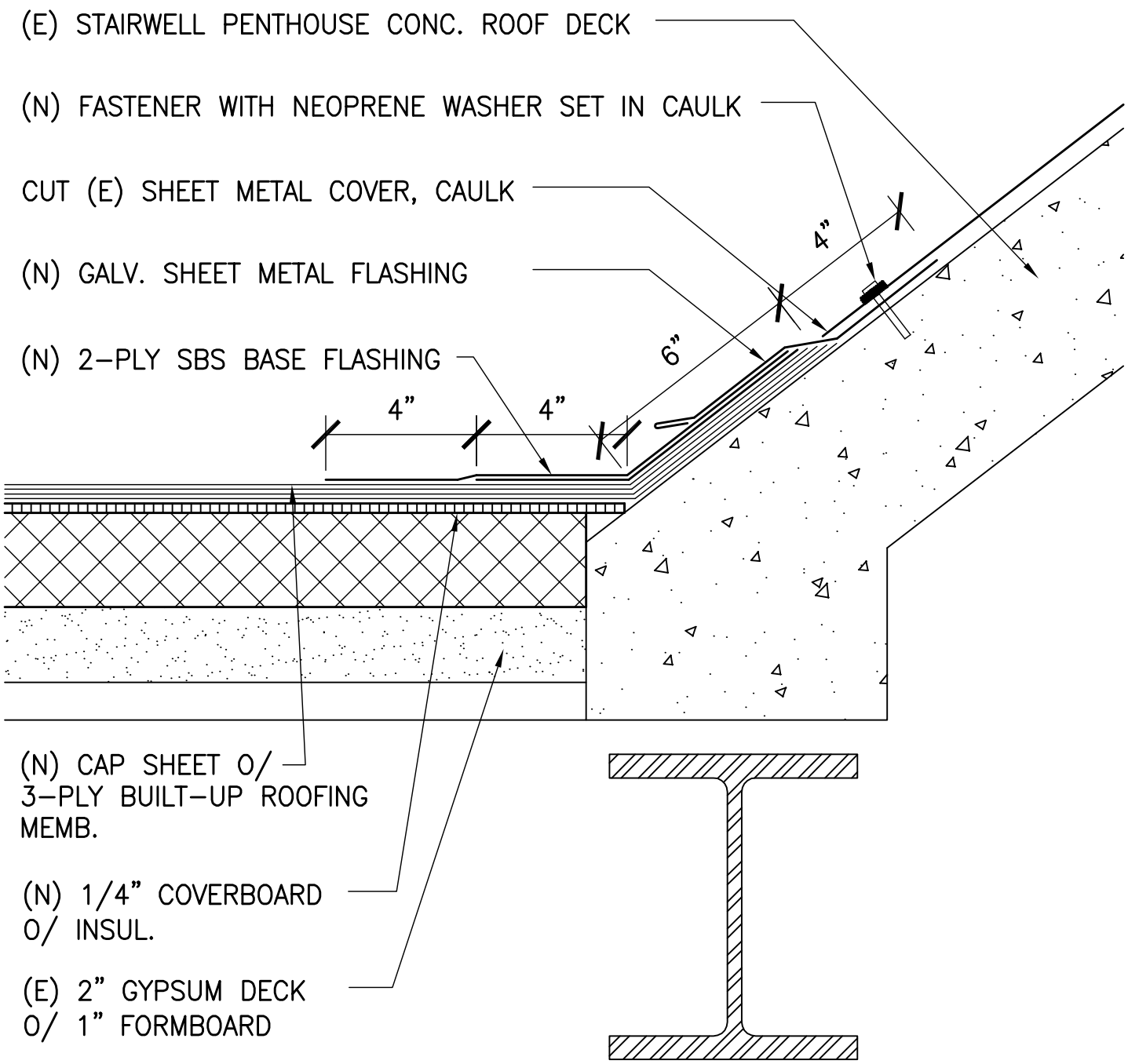

1 DETAIL @ PENTHOUSE SLOPED ROOF

SCALE: 3"=1'-0"

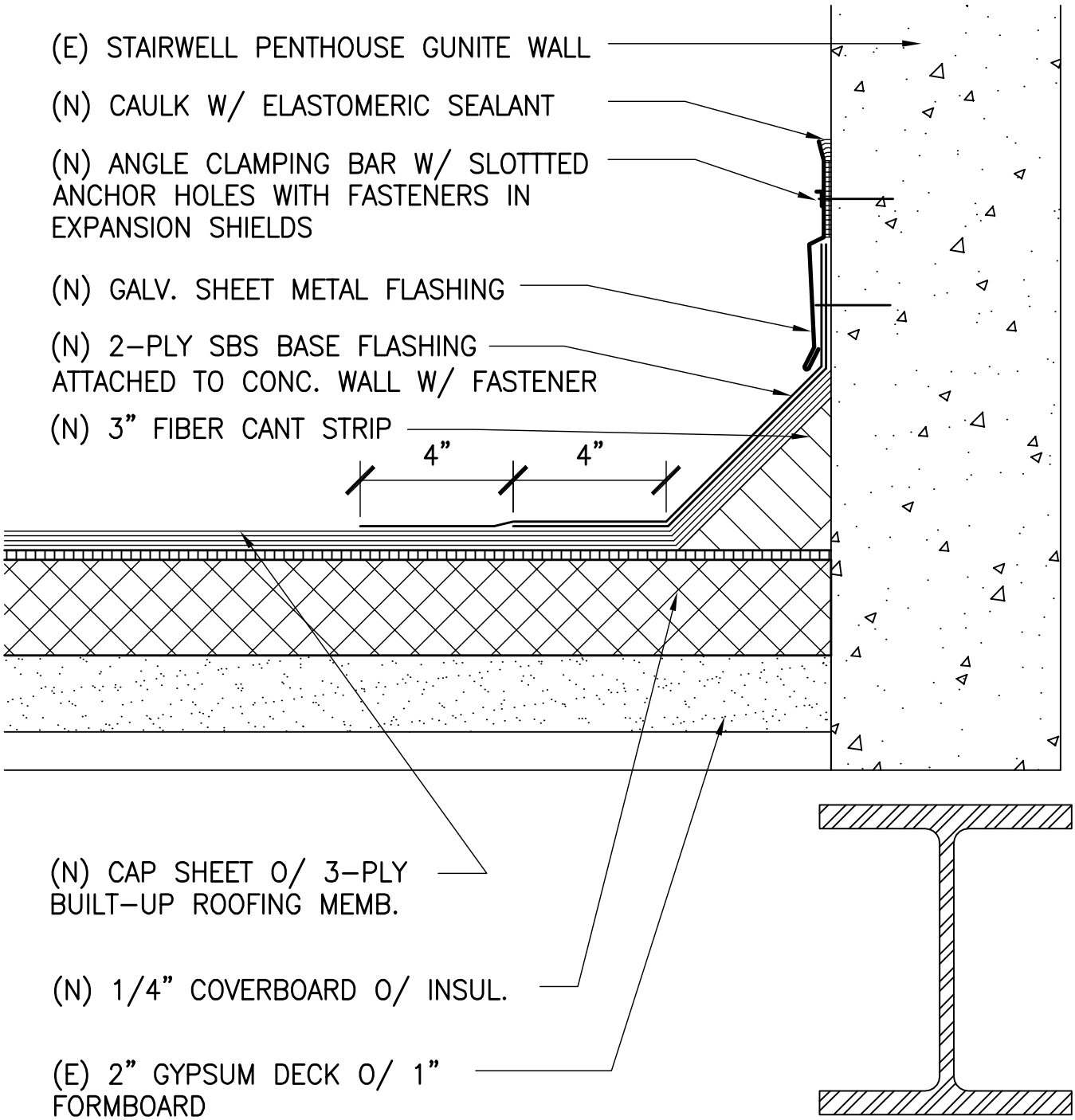

2 DETAIL @ PENTHOUSE WALL BASE

SCALE: 3"=1'-0"