BILL OF MATERIAL

SHIP QTY.	SHIP MARK	ITEM QTY.	ITEM MARK	DESCRIPTION	LENGTH FT.	LENGTH IN.	REMARKS
1	A1			FRAME			
		2	a1	L 2 X 2 X 1/4	1'	6"	
		1	b1	L 2 X 2 X 1/4	1'	6"	
		1	c1	L 2 X 2 X 1/4	1'	6"	
		1	d1	L 2 X 2 X 1/4	0'	8"	
		1	e1	EXPANDED METAL 3.14# x 10"	1'	4"	
2	B1			BAR 2 1/2 X 1/4	0'	4 11/16"	
2	C1			BAR 2 1/2 X 1/4	2'	0 3/16"	
1	D1			PL 1/4 X 8	0'	9 3/16"	
4	E1			U-BOLT, McMASTER-CARR			# 3043T51
1	HK-1			HARDWARE KIT			
		7		1/2" GALV. HEX HEAD BOLT	0'	1 1/2"	A325
		16		1/2" GALV. HEX NUT			A563
		7		1/2" GALV. LOCKWASHER			

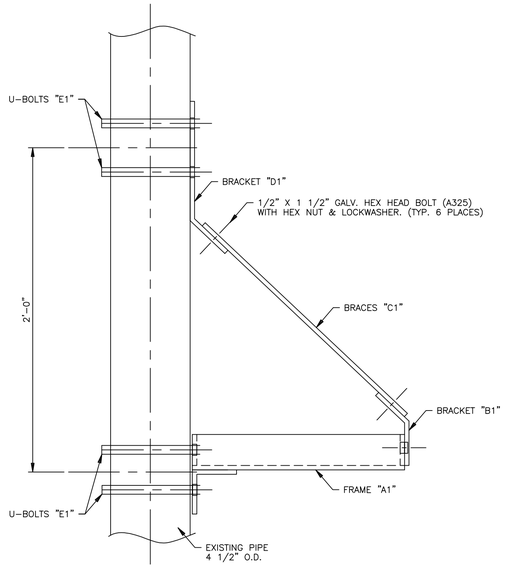

ELEVATION VIEW

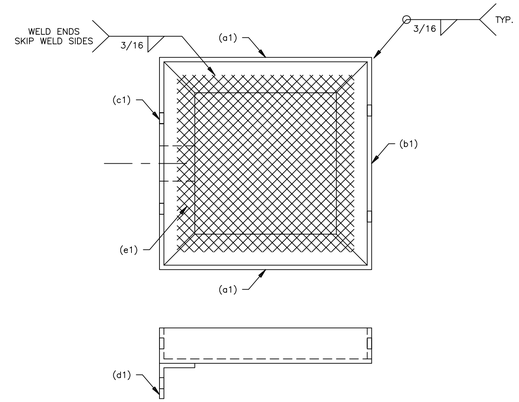

DETAIL OF FRAME "A1"

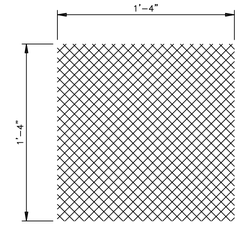

DETAIL OF (e1)
EXPANDED METAL 3.14# SQ/FT x 16" x 1'-4"

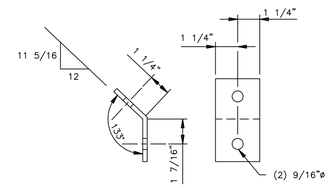

DETAIL OF BRACKET "B1"
BAR 2 1/2 X 1/4 X 0'-4 11/16"

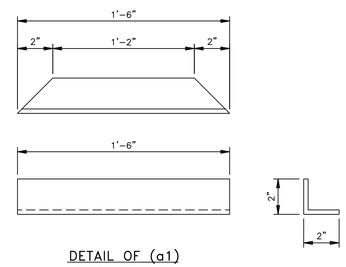

DETAIL OF (a1)
L 2 x 2 x 1/4 x 1'-6"

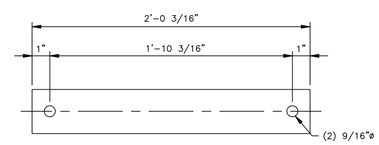

DETAIL OF BRACE "C1"
BAR 2 1/2 X 1/4 X 2'-0 3/16"

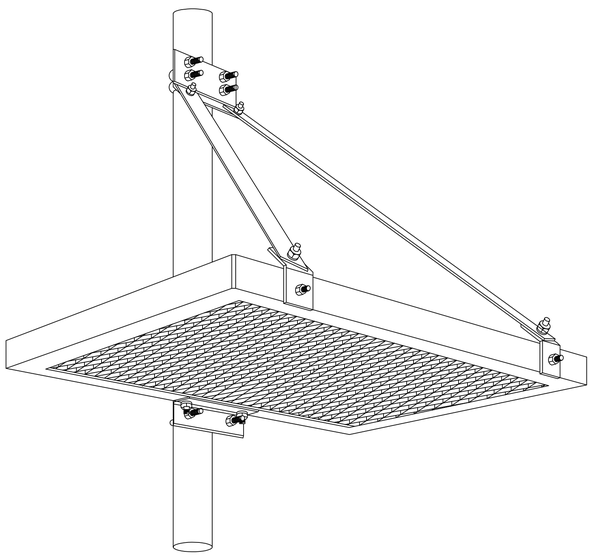

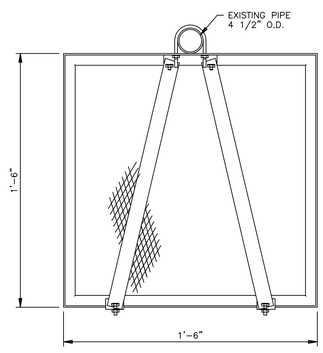

PLAN VIEW

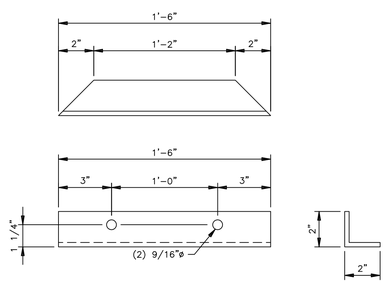

DETAIL OF (b1)
L 2 x 2 x 1/4 x 1'-6"

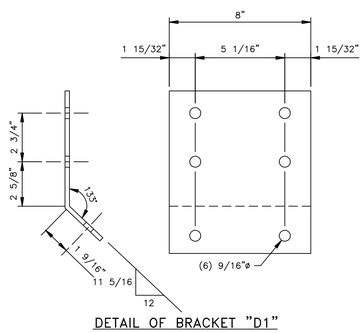

DETAIL OF BRACKET "D1"
PL 1/4 X 8 X 0'-9 3/16"

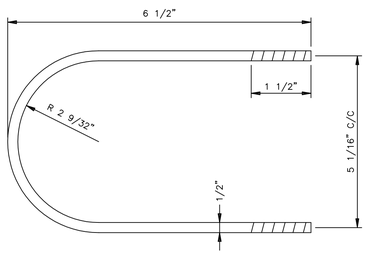

DETAIL OF U-BOLT "E1"
McMASTER-CARR, PART # 3043T51 (GALV.)
WITH QTY.(4) GALV. HEX NUTS PER U-BOLT.

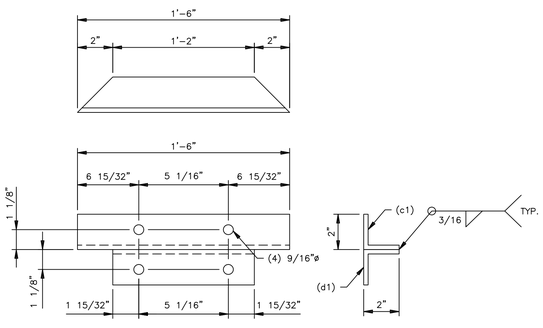

DETAIL OF (c1) & (d1)
L 2 x 2 x 1/4 x 1'-6"-(c1)
L 2 x 2 x 1/4 x 0'-8"-(d1)

NOTES:

1. ALL HOLES AS NOTED.
2. ALL WELDING TO AWS D1.1.
3. ALL MATERIAL ASTM A36 UNLESS NOTED.
4. STRUCTURE FINISH: H.D. GALV. (SINGLE DIP).

Reference Old drawing number:

REV	DESCRIPTION	DRAWN	CHKD

UNITED STATES DEPARTMENT OF ENERGY
SOUTHWESTERN POWER ADMINISTRATION
TULSA, OKLAHOMA

SYSTEM DRAWINGS
WAVEGUIDE ICE SHIELD
INSTALLATION AND BILL OF MATERIALS

SCALE	NOTED	DRAWING NUMBER	
DRAWN	DIK	SYS-C8501	
CHECKED	JEF		
SUBMITTED	JEF	FILE NAME	SHEET NUMBER
APPROVED	JEF	C8501	1 OF 1

Border name: A1ASL201
Last Edited: 11/08/05 13:54:55 Size: 36 x 24
davidkinyon Last File Name: Z:\System_Drawings\Southwestern_Master\C8501_SYS.dwg