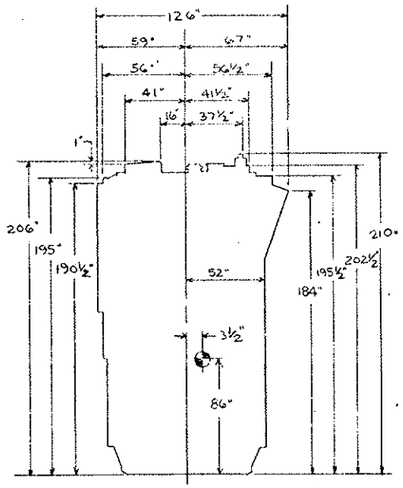

SHIPPING OUTLINE

LENGTH 291"

INDICATES APPROX. CENTER OF GRAVITY (SHIPPING)

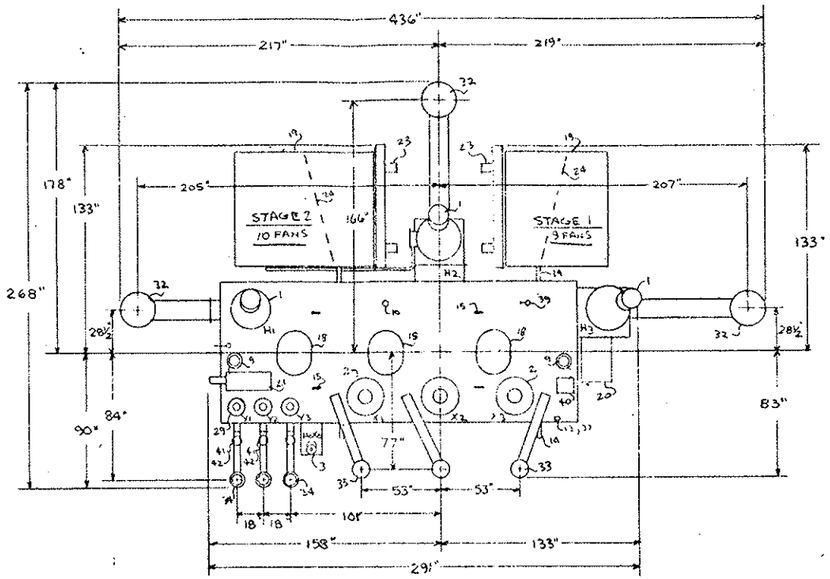

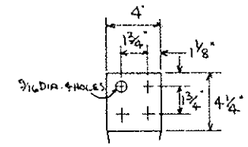

HV., LV & NEUT BUSH. CONNECTOR

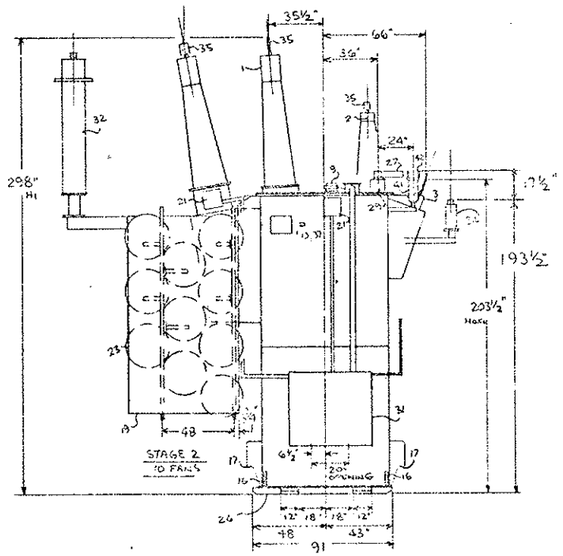

STAGE 2
10 FANS

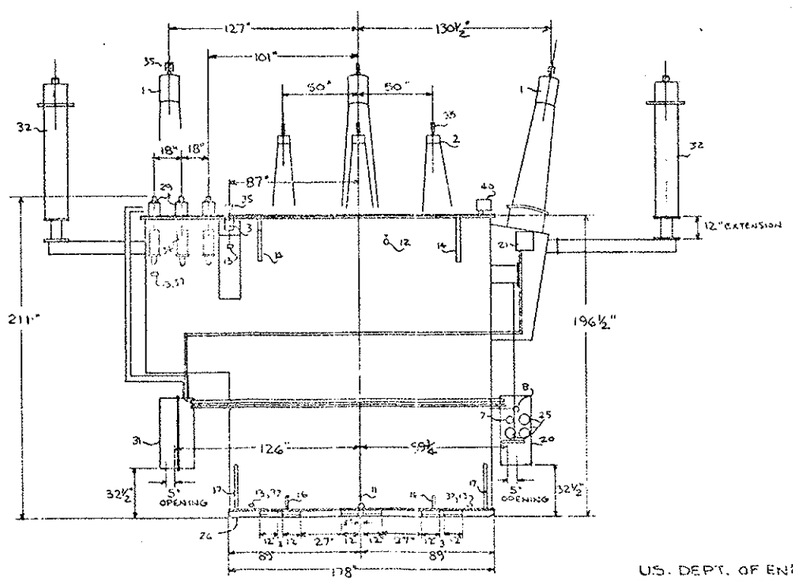

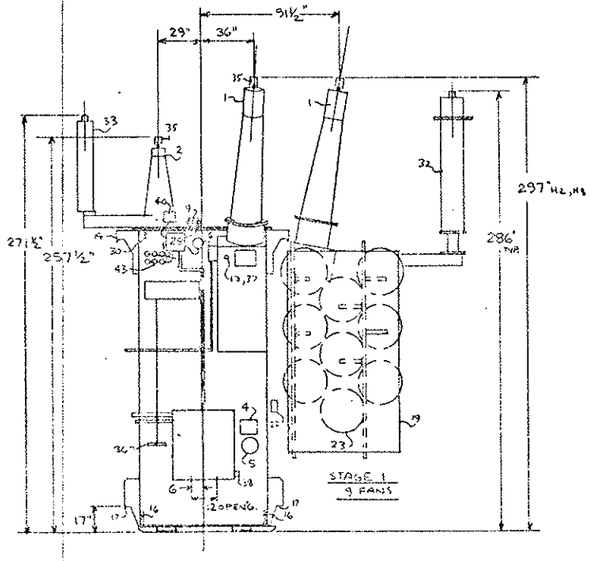

STAGE 1
9 FANS

US. DEPT. OF ENERGY
PO. DE-AC05-82WP15647

NOTES:

REFER TO F1304B058 FOR SPECS, LEGEND & WEIGHTS

FEDERAL PACIFIC ELECTRIC COMPANY

TRANSFORMER OUTLINE

TYPE OF AUTO AIR BLAST

SIZE 55/60/70 ASSEMBLY

F# 1304 - B# 058