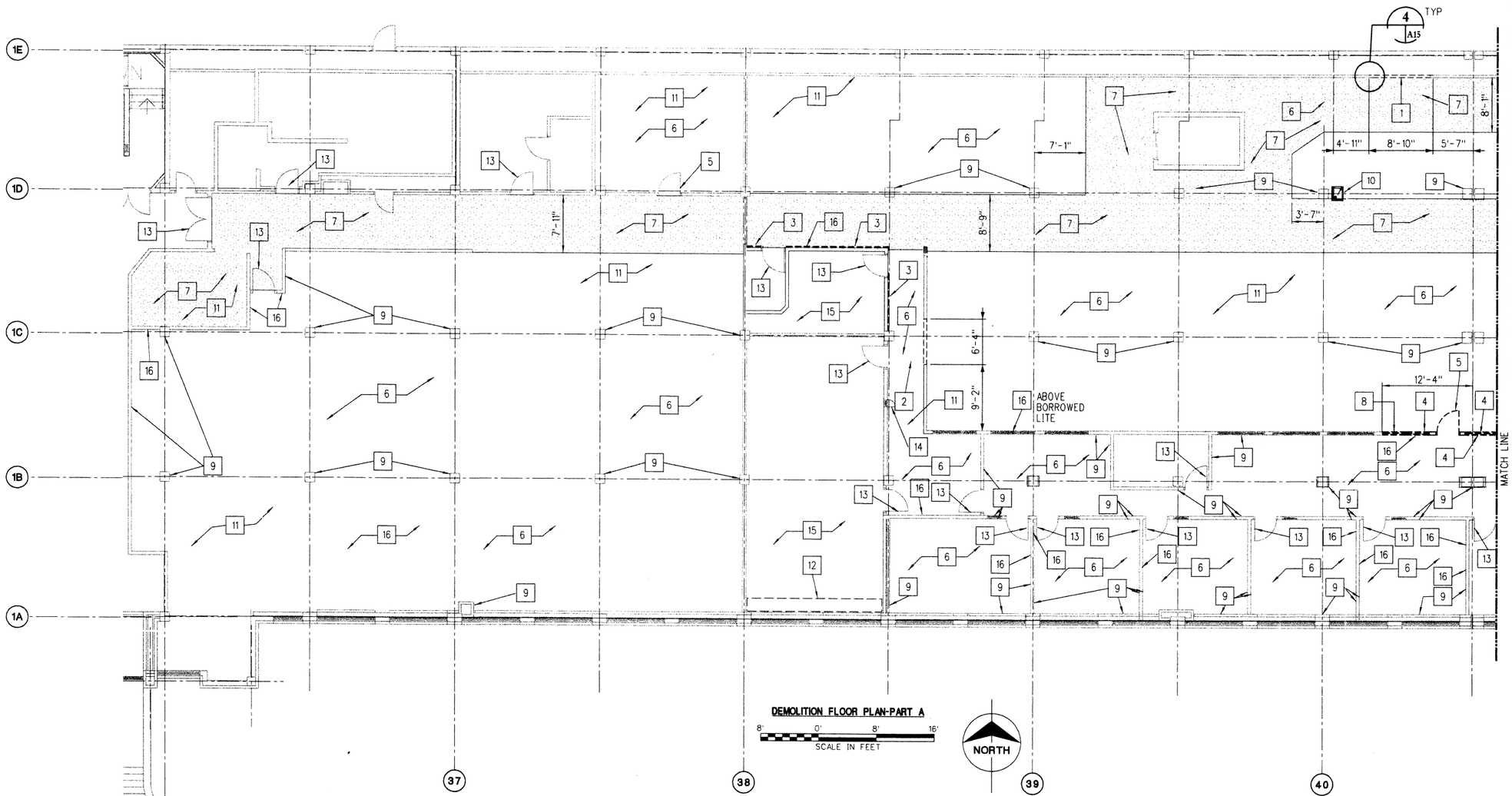

DEMOLITION FLOOR PLAN-PART A

8' 0' 8' 16'
SCALE IN FEET

DEMOLITION KEYED NOTES:

1. DEMOLISH EXISTING CMU WALL FOR NEW 8'-0" WIDE x 8'-6" HIGH RECESS.
2. DEMOLISH EXISTING GYP BD/ MTL STUD PARTITION FOR NEW DOUBLE DOOR (6'-4" WIDE x 7'-2" HIGH ROUGH OPENING).
3. DEMOLISH EXISTING ASBESTOS CONTAINING PANELS. ON CORRIDOR SIDE ONLY.
4. DEMOLISH EXISTING MTL STUD / GYP BD PARTITION.
5. DEMOLISH EXISTING DOOR, FRAME, AND HARDWARE.
6. DEMOLISH EXISTING CARPET TILE, ADHESIVE, BASE, AND THRESHOLDS. EXISTING TILE AND ADHESIVE BELOW CARPET TO REMAIN.
7. DEMOLISH EXISTING VINYL TILE, ADHESIVE, RUBBER BASE, AND TRANSITION STRIPS. SEE DRAWINGS A28 AND A29 FOR DEMOLITION OF ACM.
8. REMOVE EXISTING TRANSOM WINDOW AND FRAME.
9. REMOVE WALL COVERING, ON WALLS AND ALL FOUR SIDES OR COLUMNS.
10. REMOVE AND RETAIN ELECTRIC WATER COOLER- STORE FOR REUSE.
11. DEMOLISH EXISTING CEILING TILES & MASTIC GLUED TO CONCRETE DECK ABOVE.. SEE DEMOLITION GENERAL NOTE •3.
12. MODIFY EXISTING SUSPENDED CEILING TILE AND GRID FOR NEW HVAC DIFFUSERS.
13. EXISTING DOOR(S) AND FRAME TO REMAIN.
14. DEMOLISH EXISTING ACCESS PANEL.
15. EXISTING FINISHES TO REMAIN.
16. DEMOLISH EXISTING METAL STUD AND GYP BOARD WALL FOR NEW HVAC OPENING. COORDINATOR SIZE AND LOCATION WITH MECHANICAL DRAWINGS.

DEMOLITION GENERAL NOTES:

1. ALL DEMOLITION ACTIVITY IS TO BE COORDINATED WITH BUYERS REPRESENTATIVE.
2. ACTUAL FIELD CONDITIONS MAY VARY FROM DRAWINGS. CONTRACTOR TO NOTIFY BUYER OF ANY DISCREPANCIES PRIOR TO CONSTRUCTION.
3. WHERE EXISTING MATERIALS / EQUIPMENT ARE REMOVED, PATCH DAMAGED SURFACES TO MATCH ADJACENT SURFACES OR TO RECEIVE NEW FINISH / EQUIPMENT.
4. CONTRACTOR SHALL NOT REMOVE ANY ITEMS NECESSARY TO THE OPERATION OF THE BUILDING WITHOUT PRIOR CONSULTATION AND APPROVAL OF THE BUYER.
5. REFER TO DRAWING A1 FOR ABBREVIATIONS, LEGENDS, SYMBOLS AND GENERAL CONSTRUCTION NOTES.
6. PATCH ALL ABANDONED PENETRATIONS IN EXISTING WALLS TO MATCH EXISTING.
7. REFER TO DRAWING A15 FOR MASONRY DETAILS.
8. REFER TO DRAWING A19 FOR PENETRATION DETAILS.
9. WHERE FLOORING IS REMOVED, PREPARE SURFACE TO RECEIVE NEW FLOORING IN ACCORDANCE WITH MANUFACTURERS RECOMMENDATIONS.
10. REMOVE WALL COVERING FROM ALL WALLS AND COLUMNS. SURFACE PREPARE WALLS FOR NEW FINISHES. REFER TO DRAWING A11 FOR ROOM FINISH SCHEDULE.
11. REMOVE ALL SURFACE MOUNTED ITEMS NOT NECESSARY TO THE OPERATINO INCLUDING PLANT HANGERS, PICTURE HANGERS, MARKER BOARDS, TACK BOARD ETC. PATCH WALLS PRIOR TO PAINTING.

LEGEND

- EXISTING TO REMAIN
- EXISTING TO BE DEMOLISHED
- EXISTING FLOOR TILE TO BE DEMOLISHED (INCLUDING ADHESIVE DOWN TO BARE CONCRETE) SEE DRAWINGS A28 AND A29 FOR IDENTIFICATION OF ASBESTOS CONTAINING FLOOR TILE OR ASBESTOS CONTAINING MASTIC.

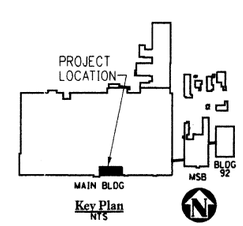

STATE OF MISSOURI
LARRY J. TATE
NUMBER A-8282
REGISTERED ARCHITECT
3/29/05

National Nuclear Security Administration
UNITED STATES DEPARTMENT OF ENERGY
KANSAS CITY PLANT OPERATED BY Honeywell

Facility Engineering Services
KCP, LLC

CONTRACT NO.
APPROVAL

PROJECT TITLE
B/2 PHASE I OFFICE INFRASTRUCTURE

DRAWING TITLE
DEMOLITION FLOOR PLAN-PART A

DATE: 03-29-05
DR BY: B. MCKLENY
CH BY: S. TATE
APP BY: L. SHROBA

PROJECT NO. K15-4G
REFERENCE NO. 98854763

DRAWING NO. **18442-A4**

SHEET 7 OF 65

36840

36840BDR.DGN(border) Off=6-8,10-45,47-63
548BASE.DGN(base sheet) Off=1,3,5,11,14,25,28-30,34-38,40,54

COPYRIGHT © 2005 BY BURNS & McDONNELL ENGINEERING COMPANY, INC.

36840-A4.DGN / 3-15-2005 16:57 / DCV

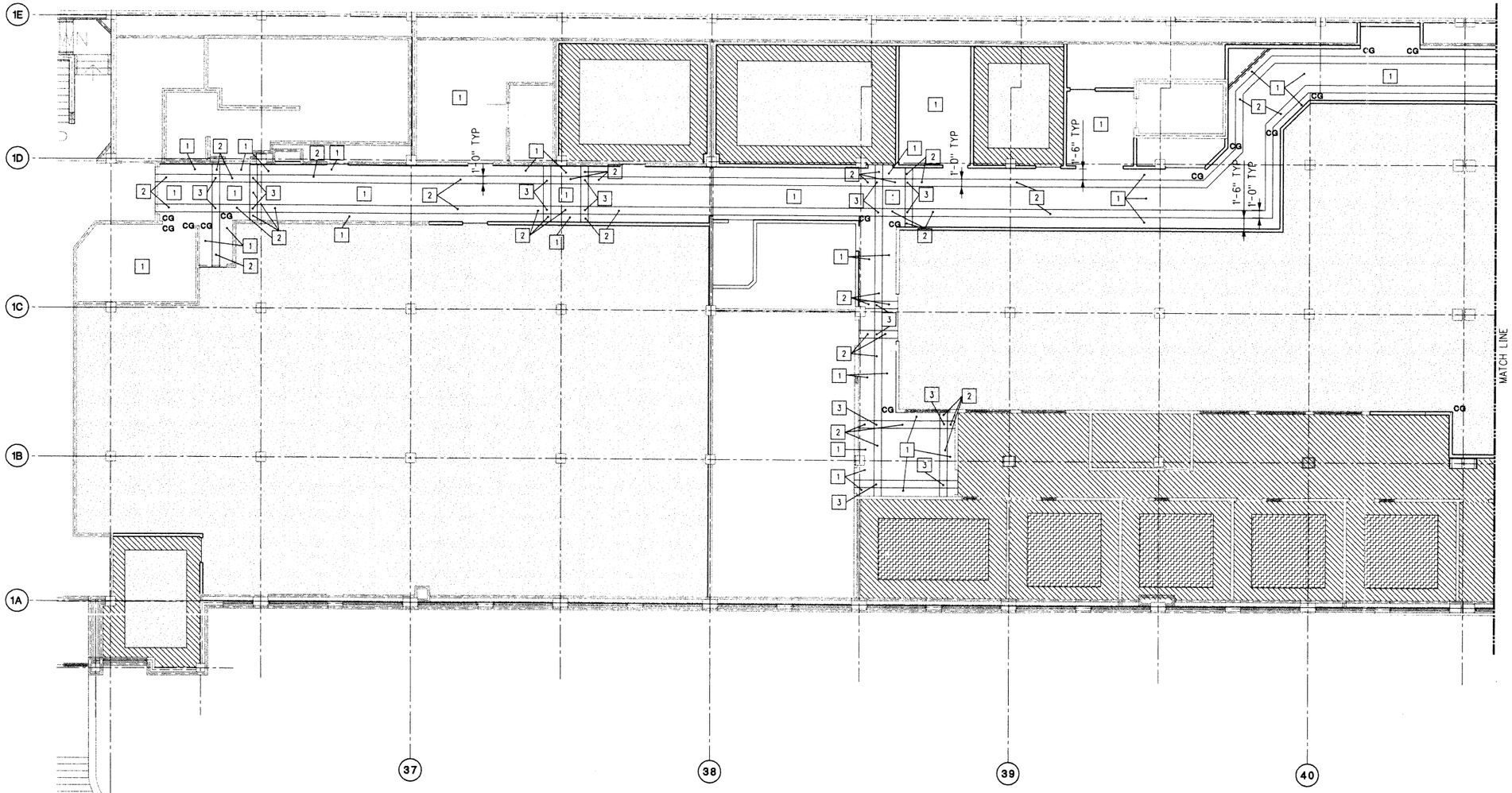

FINISHES PLAN - PART A

8' 0' 8' 16'
SCALE IN FEET

NORTH

LEGEND

CARPET 1

CARPET 2

CARPET 4

GENERAL NOTES:

1. CG - CORNER GUARD

KEY NOTES

1 VCT 1 - TYPICAL IN CORRIDOR

2 VCT 2 - TYPICAL IN CORRIDOR

3 VCT 3 - TYPICAL IN CORRIDOR

STATE OF MISSOURI
STEPHEN MARTIN
NUMBER
A-9252
REGISTERED ARCHITECT
4/4/05

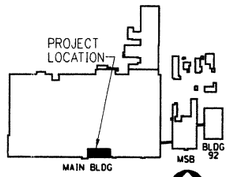

Key Plan
NTS

36840

National Nuclear Security Administration
UNITED STATES DEPARTMENT OF ENERGY
KANSAS CITY PLANT OPERATED BY Honeywell

Facility Engineering Services
KCP, LLC

CONTRACT NO.

APPROVAL

PROJECT TITLE
B/2 PHASE I OFFICE INFRASTRUCTURE

DRAWING TITLE
FINISHES PLAN - PART A

DATE: 03-29-05
DR BY: J. SHROBA
CH BY: S. TATE
APP BY: R. MOSIER

PROJECT NO. K15-4G

REFERENCE NO. 98854763

DRAWING NO. **18442-A21**

SHEET 24 OF 65

COPYRIGHT © 2005 BY BURNS & McDONNELL ENGINEERING COMPANY, INC.

36840-A21.DGN / 3-25-2005 16:47 / DCV

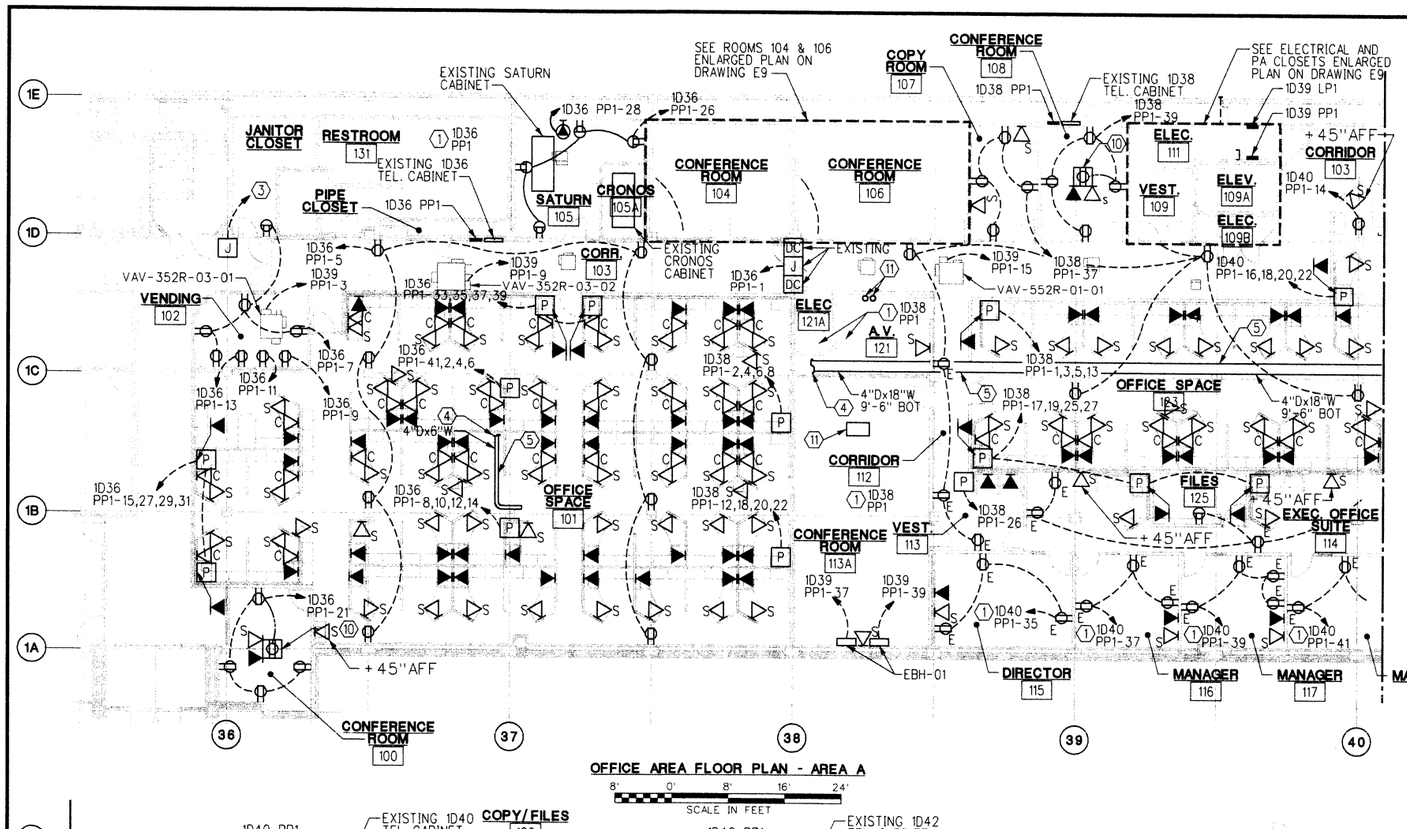

OFFICE AREA FLOOR PLAN - AREA A

SCALE IN FEET

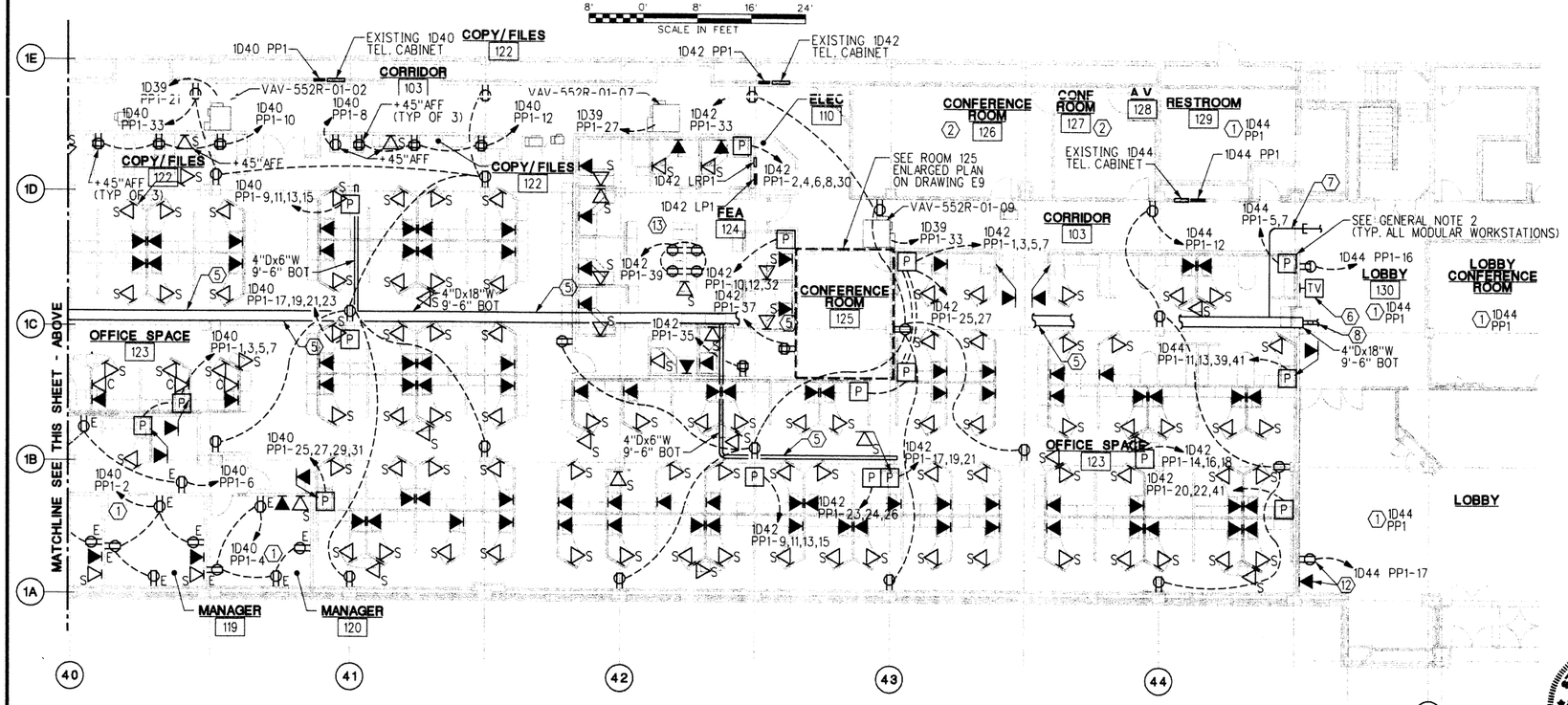

OFFICE AREA FLOOR PLAN - AREA B

SCALE IN FEET

KEYED NOTES:

1. REFEED EXISTING RECEPTACLE AND LIGHTING CIRCUITS IN THIS ROOM FROM PANELBOARD INDICATED. SEE PANELBOARD SCHEDULE FOR MORE INFORMATION.
2. LIGHTING AND RECEPTACLE CIRCUITS IN THIS ROOM SHALL REMAIN FED FROM EXISTING PANELBOARD LOCATED IN CLOSET SOUTH OF COLUMN 1E44.
3. MOUNT JUNCTION BOX ON COLUMN AT 10'-0" AFF. ROUTE EMPTY 1¼" RMC FROM BOX TO 1D39 LP1 FOR FUTURE LIGHTING PANELBOARD FEEDERS.
4. FOR CONTINUATION OF CABLE TRAY, SEE ENLARGED CABLE TRAY PLAN ON DRAWING E9.
5. RAISE CABLE TRAY TO 10'-3" BOT TO CLEAR DUCTWORK. SEE DRAWING M3 FOR HVAC PLAN.
6. RECONNECT EXISTING CABLE TO TV.
7. PROVIDE NEW 62.5/125 MICRON, 18 STRAND, PLENUM RATED, FIBER OPTIC CABLE FROM DATA CENTER HUB AT FA47 TO SATURN CABINET AT 1D37. ROUTE CABLE THROUGH EXISTING CONDUIT BETWEEN FA47 AND 1D44.5. ROUTE CABLE THROUGH CABLE TRAY BACK TO SATURN CABINET AT 1D37. TERMINATIONS BY BUYER. COIL 10' OF CABLE AT EACH END.
8. ATTACH NEW CABLE TRAY TO EXISTING CABLE TRAY.
9. PROVIDE COAXIAL CABLE FROM EXISTING TAP ON COLUMN INDICATED TO NEW OUTLET.
10. PROVIDE FLUSH MOUNTED FLOOR BOX WITH DUPLEX RECEPTACLE, DATA AND VOICE JACKS. SEE SPECIFICATION 16402. SAWCUT THROUGH CONCRETE FLOOR AND EMBED CONDUITS FOR POWER AND COMMUNICATIONS.
11. PROVIDE 6 NEW SATURN AND 4 NEW TELEPHONE CABLES TO TABLE. PULL SATURN TELEPHONE AND EXISTING VIDEO CABLES THROUGH EXISTING EMBEDDED CONDUITS FROM ROOM 121 TO TABLE..
12. COORDINATE WITH FINAL LOCATION OF ATM MACHINE.
13. NO MORE THAN TWO COMPUTER OUTLETS PER CIRCUIT IN THIS ROOM.

GENERAL NOTES:

1. SEE DRAWING A17 AND A18 FOR FURNITURE LAYOUT.
2. PROVIDE POWER TO MODULAR WORKSTATIONS AS FOLLOWS: ALL CIRCUITS SHALL HAVE DEDICATED NEUTRALS. EACH WORKSTATION SHALL HAVE ONE RECEPTACLE OUTLET FOR COMPUTER AND TWO RECEPTACLE OUTLETS FOR GENERAL USE. NO MORE THAN FOUR COMPUTER OUTLETS SHALL BE CONNECTED TO EACH CIRCUIT UON. NO MORE THAN NINE GENERAL USE OUTLETS SHALL BE CONNECTED TO EACH CIRCUIT. COMPUTER OUTLET EQUIPMENT GROUNDS SHALL BE KEPT SEPARATE FROM GENERAL USE OUTLET EQUIPMENT GROUNDS. POWER CIRCUITS SHALL DROP THROUGH FURRED-OUT COLUMNS AND WALLS IN CONDUIT AND CONNECT TO WORKSTATION POWER BASE AT FLOOR LEVEL WITH WHIP PROVIDED BY CONTRACTOR. ALTERNATIVE WIRING METHODS SHALL BE ACCEPTED AS BID OPTIONS BUT SHALL BE LIMITED BY THE NUMBER AND SIZE OF PANELBOARDS AND CIRCUIT BREAKERS SHOWN ON HE DESIGN DRAWINGS AND COMPUTER CIRCUITS SHALL BE DEDICATED. SHARED NEUTRALS, IF USED, SHALL BE SIZED FOR TWICE THE AMPACITY OF THE PHASE CONDUCTORS. ALL PANELBOARDS SHALL HAVE MINIMUM 20% SPARE LOAD CAPACITY AND MINIMUM 20% SPARE NUMBER OF CIRCUIT BREAKERS REMAINING AFTER CONSTRUCTION IS COMPLETE.
3. PROVIDE ONE 62.5/125 MICRON, 2 STRAND FIBER OPTIC CABLE FROM CRONOS CABINET TO EACH OUTLET. COIL 10 FEET OF CABLE AT CABINET AND 3 FEET OF CABLE AT OUTLET FOR TERMINATION BY BUYER. CRONOS OUTLET LOCATIONS HAVE NOT YET BEEN DETERMINED. FOR ESTIMATING PURPOSES, ASSUME 40 OUTLETS LOCATED AT WORKSTATIONS FURTHEST FROM CABINET. COORDINATE WITH BUYER FOR LOCATIONS BEFORE PURCHASING AND INSTALLING CABLE.
4. PROVIDE TWO TIA/EIA CATEGORY 6 CABLES FROM SATURN CABINETS TO EACH OUTLET SHOWN ON THIS PLAN. OUTLETS WEST OF 42 COLUMN LINE SHALL BE CONNECTED TO 1D37 CABINET. OUTLETS EAST OF 42 COLUMN LINE SHALL BE CONNECTED TO 1D46 CABINET. COIL 10 FEET OF CABLE AT CABINET FOR TERMINATION BY BUYER. JACKS, FACEPLATES AND TERMINATIONS AT WORKSTATIONS BY CONTRACTOR.
5. PROVIDE ONE TIA/EIA CATEGORY 3 CABLE FROM NEAREST TELEPHONE CABINET TO EACH OUTLET SHOWN ON THIS PLAN. COIL 10 FEET OF CABLE AT CABINET FOR TERMINATION BY BUYER. JACKS, FACEPLATES AND TERMINATIONS AT WORKSTATIONS BY CONTRACTOR.
6. ALL VOICE AND DATA CABLES SHALL BE ROUTED IN CABLE TRAY SHOWN ON THIS PLAN. EACH SYSTEM SHALL BE BUNDLED AND TIE-WRAPPED SEPARATELY IN TRAY. CABLE DROPS TO WORKSTATIONS SHALL BE ROUTED THROUGH CONDUIT INSIDE FURRED-OUT COLUMNS AND WALLS. ONE EMPTY 2" CONDUIT AND BOX FOR FUTURE USE SHALL BE INSTALLED AT EACH FURNITURE CONNECTION LOCATION IN WALLS AND COLUMNS. PROVIDE RECESSED BOX WITH GROMMETED OPENING AT EACH FURNITURE CONNECTION LOCATION IN WALLS AND COLUMNS AND CABLING PROTECTIVE WRAP (SEE SECTION 16710) FOR EXPOSED CABLE BETWEEN COLUMN AND FURNITURE. CABLE SHALL BE ROUTED THROUGH MODULAR FURNITURE WALLS TO OUTLET. SATURN AND TELEPHONE JACKS, FACEPLATES AND CONNECTIONS BY CONTRACTOR. COORDINATE WITH FURNITURE MANUFACTURER FOR LOCATIONS OF FACEPLATES AND ENTRY POINTS. CRONOS ADAPTERS, CONNECTORS, FACEPLATES AND CONNECTIONS BY BUYER. CABLE SHALL BE ROUTED CONTINUOUS FROM CABINET TO OUTLET (NO ZONE BOXES OR SPLICES IN BETWEEN EXCEPT ZONE BOXES IN FURNITURE WALLS SHALL BE ALLOWED FOR TELEPHONF ONLY). ALL CABLES SHALL BE LABELED AT BOTH ENDS AND TESTED BY CONTRACTOR. ALL FACEPLATES SHALL BE LABELED BY BUYER.
7. ALL CONDUITS AND CABLES SHALL BE CONCEALED ABOVE SUSPENDED CEILINGS, IN WALLS, IN CEILING SOFFITS AND COLUMNS WHERE POSSIBLE. EXPOSED CONDUIT AND CABLE SHALL BE KEPT TO A MINIMUM AND SHALL BE ROUTED ON CEILING, ALONG COLUMN LINES.
8. PROVIDE FLOOR, WALL AND CEILING PENETRATIONS PER PENETRATION DETAILS SHOWN ON THE ARCHITECTURAL DRAWINGS.
9. SEE ARCHITECTURAL FLOOR PLANS FOR EXISTING AND NEW WALL LOCATIONS. CUTTING AND PATCHING WILL BE REQUIRED TO INSTALL CONDUIT AND RECESS DEVICES IN EXISTING WALLS.
10. ALL EXPOSED CONDUIT, CABLE, CABLE TRAY AND SUPPORTS SHALL BE PAINTED WHITE TO MATCH THE CEILING IN OPEN CEILING AREAS.
11. SOUTH EDGE OF CABLE TRAY ALONG C COLUMN LINE SHALL BE AT LEAST 8 INCHES NORTH OF COLUMN EDGE TO ALLOW CONSTRUCTION OF SOFFITS AROUND COLUMNS.
12. SEE LIST OF SYSTEM OWNERS FOR COORDINATION ON DRAWING E0.

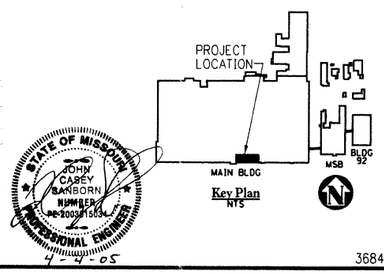

National Nuclear Security Administration
UNITED STATES DEPARTMENT OF ENERGY
KANSAS CITY PLANT OPERATED BY Honeywell

Facility Engineering Services
KCP, LLC

CONTRACT NO.
APPROVAL

PROJECT TITLE
B/2 PHASE I OFFICE INFRASTRUCTURE

DRAWING TITLE
POWER & COMMUNICATIONS NEW WORK FLOOR PLAN

DATE: 03-29-05
DR BY: B. EKBERG
CH BY: C. SANBORN
APP BY: S. STRATTON

PROJECT NO. K15-4G
REFERENCE NO. 98854763

DRAWING NO. **18442-E4**

SHEET 56 OF 65

36840

COPYRIGHT © 2005 BY BURNS & McDONNELL ENGINEERING COMPANY, INC.

36840-E04.DGN / 4-04-2005 10:53 / TRL

PANELBOARD NAME: 1D36 PP1
PANELBOARD TYPE: MAIN CIRCUIT BREAKER
PANEL LOCATION: 1D36 PP1, BLDG 2 (OFFICE BLDG)
SUPPLIED FROM: SUB 3B CKT 2C

10,000 RMS SYMMETRICAL A.I.C.
FLUSH MOUNTED, NEMA 1 ENCLOSURE
208Y/120 VOLTS, 3 PHASE, 4 WIRE

100 AMP TRIP MAIN BREAKER
100 AMP MAINS

CKT NO.	TRIP AMPS	NO. POLES	WIRE / CONDUIT	GND. WIRE	LOAD SERVED	LOAD VA	Ø	LOAD VA	LOAD SERVED	GND. WIRE	WIRE / CONDUIT	NO. POLES	TRIP AMPS	CKT. NO.
1	20	1	2-#12 , 1/2"	#12	DOOR CLOSERS 1D38	180	A	1440	MODULAR WORKSTATIONS	#12	2-#12 , 1/2"	1	20	2
3	20	1	2-#12 , 1/2"	#12	RM 104 RECPT	1080	B	1440	MODULAR WORKSTATIONS	#12	2-#12 , 1/2"	1	20	4
5	20	1	2-#10 , 1/2"	#12	CORRIDOR/COLUMN RECPT	1440	C	1440	MODULAR WORKSTATIONS	#12	2-#12 , 1/2"	1	20	6
7	20	1	2-#12 , 1/2"	#12	RM 103 & JANITOR RECPT	720	A	1440	MODULAR WORKSTATIONS	#12	2-#12 , 1/2"	1	20	8
9	20	1	2-#12 , 1/2"	#12	VENDING RM 102 RECPT	840	B	1440	MODULAR WORKSTATIONS	#12	2-#12 , 1/2"	1	20	10
11	20	1	2-#12 , 1/2"	#12	VENDING RM 102 RECPT	840	C	1440	MODULAR WORKSTATIONS	#12	2-#12 , 1/2"	1	20	12
13	20	1	2-#12 , 1/2"	#12	VENDING RM 102 RECPT	840	A	1440	MODULAR WORKSTATIONS	#12	2-#12 , 1/2"	1	20	14
15	20	1	2-#10 , 1/2"	#12	MODULAR WORKSTATIONS	1440	B		SPARE			1	20	16
17	20	1	2-#12 , 1/2"	#12	*WOMENS RR LTS/RECPT	420	C		SPARE			1	20	18
19	20	1	2-#12 , 1/2"	#12	SATURN CAB RECPT	1920	A	100	*PIPE CLOSET LTS 1D37	#12	2-#12 , 1/2"	1	20	20
21	20	1	2-#12 , 1/2"	#12	RM 100 RECPT	900	B		SPARE			1	20	22
23	20	1	2-#12 , 1/2"		RM 104 RECPT	360	C		SPARE			1	20	24
25	20	1	2-#12 , 1/2"	#12	*DRINK FTN & WMNS RR RECPT	540	A	720	SATURN CLOSET RECPT 1D37	#12	2-#12 , 1/2"	1	20	26
27	20	1	2-#10 , 1/2"	#12	MODULAR WORKSTATIONS	1440	B	2760	SATURN CAB RECEPT 1D37	#10	2-#10 , 1/2"	1	30	28
29	20	1	2-#10 , 1/2"	#12	MODULAR WORKSTATIONS	1440	C		SPARE			1	20	30
31	20	1	2-#10 , 1/2"	#12	MODULAR WORKSTATIONS	1440	A		SPARE			1	20	32
33	20	1	2-#12 , 1/2"	#12	MODULAR WORKSTATIONS	1440	B		SPACE			1		34
35	20	1	2-#12 , 1/2"	#12	MODULAR WORKSTATIONS	1440	C		SPACE			1		36
37	20	1	2-#12 , 1/2"	#12	MODULAR WORKSTATIONS	1440	A		SPACE			1		38
39	20	1	2-#12 , 1/2"	#12	MODULAR WORKSTATIONS	1440	B		SPACE			1		40
41	20	1	2-#12 , 1/2"	#12	MODULAR WORKSTATIONS	1440	C		SPACE			1		42

TOTAL CONNECTED LOAD = 36.7 kVA X 64% DEMAND FACTOR = 23.6 kVA ESTIMATED DEMAND LOAD
PHASE BALANCE (KVA) - A: 12.2 , B: 14.2 , C: 10.3
*LOAD IS EXISTING. REWIRE TO FIRST DEVICE IN CIRCUIT THRU EXISTING RACEWAY.

PANELBOARD NAME: 1D38 PP1
PANELBOARD TYPE: MAIN CIRCUIT BREAKER
PANEL LOCATION: 1D38, BLDG 2 (OFFICE BLDG)
SUPPLIED FROM: SUB 4A CKT 3C

10,000 RMS SYMMETRICAL A.I.C.
FLUSH MOUNTED, NEMA 1 ENCLOSURE
208Y/120 VOLTS, 3 PHASE, 4 WIRE

100 AMP TRIP MAIN BREAKER
100 AMP MAINS

CKT NO.	TRIP AMPS	NO. POLES	WIRE / CONDUIT	GND. WIRE	LOAD SERVED	LOAD VA	Ø	LOAD VA	LOAD SERVED	GND. WIRE	WIRE / CONDUIT	NO. POLES	TRIP AMPS	CKT. NO.
1	20	1	2-#12 , 1/2"	#12	MODULAR WORKSTATIONS	1440	A	1440	MODULAR WORKSTATIONS	#10	2-#10 , 1/2"	1	20	2
3	20	1	2-#12 , 1/2"	#12	MODULAR WORKSTATIONS	1440	B	1440	MODULAR WORKSTATIONS	#10	2-#10 , 1/2"	1	20	4
5	20	1	2-#12 , 1/2"	#12	MODULAR WORKSTATIONS	1440	C	1440	MODULAR WORKSTATIONS	#10	2-#10 , 1/2"	1	20	6
7	20	1	2-#12 , 1/2"	#12	*PM CONF RM 113A RECEPT	540	A	1440	MODULAR WORKSTATIONS	#10	2-#10 , 1/2"	1	20	8
9	20	1	2-#12 , 1/2"	#12	*RM 121 RECEPT	600	B	780	*PM CONF RM 113A LTS (PERIM)	#12	2-#12 , 1/2"	1	20	10
11	20	1	2-#12 , 1/2"	#12	*PM CONF RM 113A RECEPT	540	C	1440	MODULAR WORKSTATIONS	#10	2-#10 , 1/2"	1	20	12
13	20	1	2-#12 , 1/2"	#12	MODULAR WORKSTATIONS	1440	A	770	*PM CONF RM 113A LTS	#12	2-#12 , 1/2"	1	20	14
15	20	1	2-#12 , 1/2"	#12	*PM CONF RM 113A RECEPT	540	B	540	*PM CONF RM 113A RECEPT (TV)	#12	2-#12 , 1/2"	1	20	16
17	20	1	2-#12 , 1/2"	#12	MODULAR WORKSTATIONS	1440	C	1440	MODULAR WORKSTATIONS	#10	2-#10 , 1/2"	1	20	18
19	20	1	2-#12 , 1/2"	#12	MODULAR WORKSTATIONS	1440	A	1440	MODULAR WORKSTATIONS	#10	2-#10 , 1/2"	1	20	20
21	20	1	2-#12 , 1/2"	#12	*RM 121 RECEPT	600	B	1440	MODULAR WORKSTATIONS	#10	2-#10 , 1/2"	1	20	22
23	20	1	2-#12 , 1/2"	#12	*PM CONF RM 113A RECEPT	540	C	360	RM 106 RECEPT	#12	2-#12 , 1/2"	1	20	24
25	20	1	2-#12 , 1/2"	#12	MODULAR WORKSTATIONS	1440	A	360	RM 113 RECEPT	#12	2-#12 , 1/2"	1	20	26
27	20	1	2-#12 , 1/2"	#12	MODULAR WORKSTATIONS	1440	B		SPARE			1	20	28
29	20	1	2-#12 , 1/2"	#12	*RM 121 RECEPT	600	C		SPARE			1	20	30
31	20	1	2-#12 , 1/2"	#12	CORRIDOR/COLUMN RECEPT	1620	A		SPARE			1	20	32
33	20	1	2-#12 , 1/2"	#12	RM 106 RECEPT	180	B		SPARE			1	20	34
35	20	1	2-#12 , 1/2"	#12	RM 106 RECEPT	1260	C		SPARE			1	20	36
37	20	1	2-#12 , 1/2"	#12	RM 107 RECEPT	900	A		SPARE			1	20	38
39	20	1	2-#12 , 1/2"	#12	RM 108 RECEPT	900	B		SPACE			1		40
41	20	1	2-#12 , 1/2"	#12	PA AMPLIFIERS 1D39	180	C		SPACE			1		42

TOTAL CONNECTED LOAD = 34.9 kVA X 67% DEMAND FACTOR = 23.2 kVA ESTIMATED DEMAND LOAD
PHASE BALANCE (KVA) - A: 14.3 , B: 9.9 , C: 10.7
*LOAD IS EXISTING. REWIRE TO FIRST DEVICE IN CIRCUIT THRU EXISTING RACEWAY.

PANELBOARD NAME: 1D39 LP1
PANELBOARD TYPE: MAIN LUGS ONLY
PANEL LOCATION: 1D42, BLDG 2 (OFFICE BLDG)
SUPPLIED FROM: 1D39 DP1

22,000 RMS SYMMETRICAL A.I.C.
SURFACE MOUNTED, NEMA 1 ENCLOSURE
480Y/277 VOLTS, 3 PHASE, 4 WIRE

125 AMP MAINS

CKT NO.	TRIP AMPS	NO. POLES	WIRE / CONDUIT	GND. WIRE	LOAD SERVED	LOAD VA	Ø	LOAD VA	LOAD SERVED	GND. WIRE	WIRE / CONDUIT	NO. POLES	TRIP AMPS	CKT. NO.
1	20	1	2-#12 , 1/2"	#12	EMERG LIGHTING (1A36-1D40)	1216	A	832	LIGHTING RMS 104-108, 111	#12	2-#12 , 1/2"	1	20	2
3	20	1	2-#12 , 1/2"	#12	LIGHTING CORR (1C36-1C40)	640	B	1344	LIGHTING RM 101 (1A36-1C37)	#12	2-#12 , 1/2"	1	20	4
5	20	1	2-#12 , 1/2"	#12	LIGHTING RM 101 (1A37-1C38)	2368	C	1152	LIGHTING RM 123 (1B38.5-1C40)	#12	2-#12 , 1/2"	1	20	6
7	20	1	2-#12 , 1/2"	#12	LIGHTING RMS 114-120, 125	2432	A	320	LIGHTING RMS 100, 102	#12	2-#12 , 1/2"	1	20	8
9	20	1			SPARE		B		SPARE			1	20	10
11	20	1			SPARE		C		SPARE			1	20	12
13	20	1			SPARE		A		SPARE			1	20	14
15	20	1			SPARE		B		SPARE			1	20	16
17		1			SPACE		C		SPACE			1		18
19		1			SPACE		A		SPACE			1		20
21		1			SPACE		B		SPACE			1		22
23		1			SPACE		C		SPACE			1		24
25		1			SPACE		A		SPACE			1		26
27		1			SPACE		B		SPACE			1		28
29		1			SPACE		C		SPACE			1		30
							A							
							B							
							C							
							A							
							B							
							C							

TOTAL CONNECTED LOAD = 10.3 kVA X 100% DEMAND FACTOR = 10.3 kVA ESTIMATED DEMAND LOAD
PHASE BALANCE (KVA) - A: 4.8 , B: 2 , C: 3.5

PANELBOARD NAME: 1D39 PP1
PANELBOARD TYPE: MAIN CIRCUIT BREAKER
PANEL LOCATION: 1D39, BLDG 2 (OFFICE BLDG)
SUPPLIED FROM: TRANSFORMER

22,000 RMS SYMMETRICAL A.I.C.
SURFACE MOUNTED, NEMA 1 ENCLOSURE
480Y/277 VOLTS, 3 PHASE, 4 WIRE

175 AMP TRIP MAIN BREAKER
250 AMP MAINS

CKT NO.	TRIP AMPS	NO. POLES	WIRE / CONDUIT	GND. WIRE	LOAD SERVED	LOAD VA	Ø	LOAD VA	LOAD SERVED	GND. WIRE	WIRE / CONDUIT	NO. POLES	TRIP AMPS	CKT. NO.
						1800	A							
3	15	3	4-#12 , 1/2"	#12	VAV-352R-03-01	1800	B		SPARE			3	15	4
						1800	C							
						6466	A		SPACE					
9	30	3	4-#10 , 1/2"	#10	VAV-352R-03-02	6466	B		SPACE					
						6466	C		SPACE					
						4666	A		SPACE					
15	25	3	4-#10 , 1/2"	#10	VAV-552R-01-01	4666	B		SPACE					
						4666	C		SPACE					
						4168	A		SPACE					
21	20	3	4-#12 , 1/2"	#12	VAV-552R-01-02	4168	B		SPACE					
						4168	C		SPACE					
						6066	A		SPACE					
27	30	3	4-#10 , 1/2"	#10	VAV-552R-01-07	6066	B		SPACE					
						6066	C		SPACE					
						7366	A		SPACE					
33	35	3	4-#8 , 3/4"	#10	VAV-552R-01-09	7366	B		SPACE					
						7366	C		SPACE					
37	15	1	2-#12 , 1/2"	#12	EBH-1A	2500	A		SPACE					
39	15	1	2-#12 , 1/2"	#12	EBH-1B	2500	B		SPACE					
41	15	1			SPARE		C		SPACE					

TOTAL CONNECTED LOAD = 96.6 kVA X 100% DEMAND FACTOR = 96.6 kVA ESTIMATED DEMAND LOAD
PHASE BALANCE (KVA) - A: 33 , B: 33 , C: 30.5

STATE OF MISSOURI
JOHN CASEY SANBORN NUMBER PE-2003015004
PROFESSIONAL ENGINEER
4-4-05

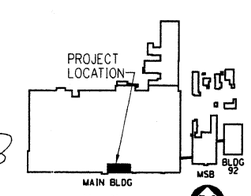

Key Plan
NTS

36840

NNSA National Nuclear Security Administration
UNITED STATES DEPARTMENT OF ENERGY
OPERATED BY Honeywell
Facility Engineering Services
KCP, LLC

CONTRACT NO.
APPROVAL

PROJECT TITLE
B/2 PHASE I
OFFICE INFRASTRUCTURE

DRAWING TITLE
PANELBOARD SCHEDULES

DATE: 03-29-05
DR BY: B. EKBERG
CH BY: C. SANBORN
APP BY: S. STRATTON
PROJECT NO. K15-4G
REFERENCE NO. 98854763
DRAWING NO. 18442-E11
SHEET 63 OF 65

COPYRIGHT © 2005 BY BURNS & McDONNELL ENGINEERING COMPANY, INC.

36840-E11.DGN / 4-04-2005 11:04 / TRL

PANELBOARD NAME:	1D40 PP1	10,000 RMS SYMMETRICAL A.I.C.		
PANELBOARD TYPE:	MAIN CIRCUIT BREAKER	FLUSH MOUNTED, NEMA 1 ENCLOSURE	100 AMP TRIP MAIN BREAKER	
PANEL LOCATION:	1D40 PP1, BLDG 2 (OFFICE BLDG)	208Y/120 VOLTS, 3 PHASE, 4 WIRE	100 AMP MAINS	
SUPPLIED FROM:	SUB 4A CKT 4A			

CKT NO.	TRIP AMPS	NO. POLES	WIRE / CONDUIT	GND. WIRE	LOAD SERVED	LOAD VA	Ø	LOAD VA	LOAD SERVED	GND. WIRE	WIRE / CONDUIT	NO. POLES	TRIP AMPS	CKT. NO.
1	20	1	2-#12 , 1/2"	#12	MODULAR WORKSTATIONS	1440	A	720	RM 119 RECEPT	#12	2-#12 , 1/2"	1	20	2
3	20	1	2-#12 , 1/2"	#12	MODULAR WORKSTATIONS	1440	B	720	RM 120 RECEPT	#12	2-#12 , 1/2"	1	20	4
5	20	1	2-#12 , 1/2"	#12	MODULAR WORKSTATIONS	1440	C	1080	RM 114, 125 RECEPT	#10	2-#10 , 1/2"	1	20	6
7	20	1	2-#12 , 1/2"	#12	MODULAR WORKSTATIONS	1440	A	1500	RM 122 COPIER RECEPT	#12	2-#12 , 1/2"	1	20	8
9	20	1	2-#12 , 1/2"	#12	MODULAR WORKSTATIONS	1440	B	1080	RM 122 RECEPT	#12	2-#12 , 1/2"	1	20	10
11	20	1	2-#12 , 1/2"	#12	MODULAR WORKSTATIONS	1440	C	1080	RM 122 RECEPT	#12	2-#12 , 1/2"	1	20	12
13	20	1	2-#12 , 1/2"	#12	MODULAR WORKSTATIONS	1440	A	960	RM 122 DRINK FTN RECEPT	#12	2-#12 , 1/2"	1	20	14
15	20	1	2-#12 , 1/2"	#12	MODULAR WORKSTATIONS	1440	B	1440	MODULAR WORKSTATIONS	#12	2-#12 , 1/2"	1	20	16
17	20	1	2-#12 , 1/2"	#12	MODULAR WORKSTATIONS	1440	C	1440	MODULAR WORKSTATIONS	#12	2-#12 , 1/2"	1	20	18
19	20	1	2-#12 , 1/2"	#12	MODULAR WORKSTATIONS	1440	A	1440	MODULAR WORKSTATIONS	#12	2-#12 , 1/2"	1	20	20
21	20	1	2-#12 , 1/2"	#12	MODULAR WORKSTATIONS	1440	B	1440	MODULAR WORKSTATIONS	#12	2-#12 , 1/2"	1	20	22
23	20	1	2-#12 , 1/2"	#12	MODULAR WORKSTATIONS	1440	C		SPARE			1	20	24
25	20	1	2-#12 , 1/2"	#12	MODULAR WORKSTATIONS	1440	A		SPARE			1	20	26
27	20	1	2-#12 , 1/2"	#12	MODULAR WORKSTATIONS	1440	B		SPARE			1	20	28
29	20	1	2-#12 , 1/2"	#12	MODULAR WORKSTATIONS	1440	C		SPARE			1	20	30
31	20	1	2-#12 , 1/2"	#12	MODULAR WORKSTATIONS	1440	A		SPARE			1	20	32
33	20	1	2-#10 , 1/2"	#10	CORRIDOR/COLUMN RECEPT	1440	B		SPARE			1	20	34
35	20	1	2-#12 , 1/2"	#12	RM 115 RECEPT	540	C		SPARE			1	20	36
37	20	1	2-#12 , 1/2"	#12	RM 116 RECEPT	540	A		SPARE			1	20	38
39	20	1	2-#12 , 1/2"	#12	RM 117 RECEPT	720	B		SPACE			1		40
41	20	1	2-#12 , 1/2"	#12	RM 118 RECEPT	540	C		SPACE			1		42

TOTAL CONNECTED LOAD = 39.7 kVA X 63% DEMAND FACTOR = 24.9 kVA ESTIMATED DEMAND LOAD
PHASE BALANCE (KVA) - A: 13.8 , B: 14 , C: 11.9

PANELBOARD NAME:	1D42 LP1	22,000 RMS SYMMETRICAL A.I.C.	
PANELBOARD TYPE:	MAIN LUGS ONLY	SURFACE MOUNTED, NEMA 1 ENCLOSURE	
PANEL LOCATION:	1D42, BLDG 2 (OFFICE BLDG)	480Y/277 VOLTS, 3 PHASE, 4 WIRE	125 AMP MAINS
SUPPLIED FROM:	1D39 PP1		

CKT NO.	TRIP AMPS	NO. POLES	WIRE / CONDUIT	GND. WIRE	LOAD SERVED	LOAD VA	Ø	LOAD VA	LOAD SERVED	GND. WIRE	WIRE / CONDUIT	NO. POLES	TRIP AMPS	CKT. NO.
1	20	1	2-#12 , 1/2"	#12	LIGHTS RM 123 (1A43.5-1C44.5)	2240	A	1472	EMERG LIGHTS (1A40-1C44.5)	#12	2-#12 , 1/2"	1	20	2
3	20	1	2-#12 , 1/2"	#12	LIGHTS RM 123 (1A42.5-1C43.5)	1664	B	2176	LIGHTS RM 123 (1A41.5-1C42.5)	#12	2-#12 , 1/2"	1	20	4
5	20	1	2-#12 , 1/2"	#12	LIGHTS RM 123 (1A40-1C41)	2496	C	704	LIGHTS CORR 103 (1D40-1D44.5)	#12	2-#12 , 1/2"	1	20	6
7	20	1	2-#12 , 1/2"	#12	LIGHTS RM 124	1380	A		SPACE					
9	20	1			SPARE		B		SPACE					
11	20	1			SPARE		C		SPACE					
					SPACE		A		SPACE					
					SPACE		B		SPACE					
					SPACE		C		SPACE					
					SPACE		A		SPACE					
					SPACE		B		SPACE					
					SPACE		C		SPACE					
					SPACE		A		SPACE					
					SPACE		B		SPACE					
					SPACE		C		SPACE					
							A							
							B							
							C							
							A							
							B							
							C							

TOTAL CONNECTED LOAD = 12.1 kVA X 100% DEMAND FACTOR = 12.1 kVA ESTIMATED DEMAND LOAD
PHASE BALANCE (KVA) - A: 5.1 , B: 3.8 , C: 3.2

PANELBOARD NAME:	1D42 PP1	10,000 RMS SYMMETRICAL A.I.C.	
PANELBOARD TYPE:	MAIN CIRCUIT BREAKER	FLUSH MOUNTED, NEMA 1 ENCLOSURE	100 AMP TRIP MAIN BREAKER
PANEL LOCATION:	1D42, BLDG 2 (OFFICE BLDG)	208Y/120 VOLTS, 3 PHASE, 4 WIRE	100 AMP MAINS
SUPPLIED FROM:	SUB 4A CKT 4C		

CKT NO.	TRIP AMPS	NO. POLES	WIRE / CONDUIT	GND. WIRE	LOAD SERVED	LOAD VA	Ø	LOAD VA	LOAD SERVED	GND. WIRE	WIRE / CONDUIT	NO. POLES	TRIP AMPS	CKT. NO.
1	20	1	2-#12 , 1/2"	#12	MODULAR WORKSTATIONS	1440	A	1440	MODULAR WORKSTATIONS	#12	2-#12 , 1/2"	1	20	2
3	20	1	2-#12 , 1/2"	#12	MODULAR WORKSTATIONS	1440	B	720	MODULAR WORKSTATIONS	#12	2-#12 , 1/2"	1	20	4
5	20	1	2-#12 , 1/2"	#12	MODULAR WORKSTATIONS	1440	C	720	MODULAR WORKSTATIONS	#12	2-#12 , 1/2"	1	20	6
7	20	1	2-#12 , 1/2"	#12	MODULAR WORKSTATIONS	1440	A	720	MODULAR WORKSTATIONS	#12	2-#12 , 1/2"	1	20	8
9	20	1	2-#12 , 1/2"	#12	MODULAR WORKSTATIONS	1440	B	720	MODULAR WORKSTATIONS	#12	2-#12 , 1/2"	1	20	10
11	20	1	2-#12 , 1/2"	#12	MODULAR WORKSTATIONS	1440	C	1440	MODULAR WORKSTATIONS	#12	2-#12 , 1/2"	1	20	12
13	20	1	2-#12 , 1/2"	#12	MODULAR WORKSTATIONS	1440	A	1440	MODULAR WORKSTATIONS	#12	2-#8 , 1/2"	1	20	14
15	20	1	2-#12 , 1/2"	#12	MODULAR WORKSTATIONS	1440	B	1440	MODULAR WORKSTATIONS	#12	2-#8 , 1/2"	1	20	16
17	20	1	2-#10 , 1/2"	#12	MODULAR WORKSTATIONS	1440	C	1440	MODULAR WORKSTATIONS	#12	2-#8 , 1/2"	1	20	18
19	20	1	2-#10 , 1/2"	#12	MODULAR WORKSTATIONS	1440	A	720	MODULAR WORKSTATIONS	#12	2-#10 , 1/2"	1	20	20
21	20	1	2-#10 , 1/2"	#12	MODULAR WORKSTATIONS	1440	B	720	MODULAR WORKSTATIONS	#12	2-#10 , 1/2"	1	20	22
23	20	1	2-#10 , 1/2"	#12	MODULAR WORKSTATIONS	1440	C	720	MODULAR WORKSTATIONS	#12	2-#10 , 1/2"	1	20	24
25	20	1	2-#12 , 1/2"	#12	MODULAR WORKSTATIONS	1440	A	720	MODULAR WORKSTATIONS	#12	2-#10 , 1/2"	1	20	26
27	20	1	2-#12 , 1/2"	#12	MODULAR WORKSTATIONS	1440	B	180	RM 125 RECEPT	#12	2-#12 , 1/2"	1	20	28
29	20	1	2-#12 , 1/2"	#12	RM 125 RECEPT	1280	C	720	MODULAR WORKSTATIONS	#12	2-#12 , 1/2"	1	20	30
31	20	1	2-#12 , 1/2"	#12	RM 125 RECEPT	360	A	720	MODULAR WORKSTATIONS	#12	2-#12 , 1/2"	1	20	32
33	20	1	2-#10 , 1/2"	#12	CORRIDOR/COLUMN RECEPT	1440	B		SPARE			1	20	34
35	20	1	2-#12 , 1/2"	#12	RM 124 RECEPT	1000	C		SPARE			1	20	36
37	20	1	2-#12 , 1/2"	#12	RM 124 RECEPT	1000	A		SPARE			1	20	38
39	20	1	2-#12 , 1/2"	#12	RM 124 RECEPT	720	B		SPARE			1	20	40
41	20	1	2-#8 , 1/2"	#12	MODULAR WORKSTATIONS	1440	C		SPARE			1	20	42

TOTAL CONNECTED LOAD = 42 kVA X 62% DEMAND FACTOR = 26 kVA ESTIMATED DEMAND LOAD
PHASE BALANCE (KVA) - A: 14.3 , B: 13.1 , C: 14.5

PANELBOARD NAME:	1D44 PP1	10,000 RMS SYMMETRICAL A.I.C.	
PANELBOARD TYPE:	MAIN CIRCUIT BREAKER	FLUSH MOUNTED, NEMA 1 ENCLOSURE	100 AMP TRIP MAIN BREAKER
PANEL LOCATION:	1D44, BLDG 2 (OFFICE BLDG)	208Y/120 VOLTS, 3 PHASE, 4 WIRE	100 AMP MAINS
SUPPLIED FROM:	SUB 4A CKT 3A		

CKT NO.	TRIP AMPS	NO. POLES	WIRE / CONDUIT	GND. WIRE	LOAD SERVED	LOAD VA	Ø	LOAD VA	LOAD SERVED	GND. WIRE	WIRE / CONDUIT	NO. POLES	TRIP AMPS	CKT. NO.
1	20	1	2-#12 , 1/2"	#12	*LOBBY RECEPT	1080	A	1000	*D553 COMPUTERS	#12	2-#12 , 1/2"	1	20	2
3	20	1	2-#12 , 1/2"	#12	*TV @ 1C45	600	B	950	*MENS RR LTS & FIRE DR 1D45	#12	2-#12 , 1/2"	1	20	4
5	20	1	2-#12 , 1/2"	#12	MODULAR WORKSTATIONS	1440	C		SPARE			1	20	6
7	20	1	2-#12 , 1/2"	#12	MODULAR WORKSTATIONS	1440	A	630	*LOBBY & LOBBY CR LTS	#12	2-#12 , 1/2"	1	20	8
9	20	1	2-#12 , 1/2"	#12	*DRK FOUNTAIN @ 1D44	180	B	1100	*LOBBY & LOBBY RR LTS	#12	2-#12 , 1/2"	1	20	10
11	20	1	2-#12 , 1/2"	#12	MODULAR WORKSTATIONS	1440	C	720	CORRIDOR/COLUMN RECEPT	#12	2-#12 , 1/2"	1	20	12
13	20	1	2-#12 , 1/2"	#12	MODULAR WORKSTATIONS	1440	A	1000	*LOBBY LTS	#12	2-#12 , 1/2"	1	20	14
15	20	1	2-#12 , 1/2"	#12	*LOBBY CONF RM	1290	B	960	TV, HANDICAP	#12	2-#12 , 1/2"	1	20	16
17	20	1	2-#12 , 1/2"	#12	LOBBY ATM	360	C	360	*MENS RR RECEPT	#12	2-#12 , 1/2"	1	20	18
19	20	1	2-#12 , 1/2"	#12	*STAIRWELL EMERG LTS	180	A	1000	*LOBBY HEATER FAN	#12	2-#12 , 1/2"	1	20	20
21	20	1			SPARE		B	800	*LOBBY ENTRANCE LTS	#12	2-#12 , 1/2"	1	20	22
23	20	1	2-#12 , 1/2"	#12	*LOBBY DRK FOUNTAIN & LTS	1180	C		SPACE					
25	20	1	2-#12 , 1/2"	#12	*LOBBY LTS	1000	A		SPACE					
27	20	1	2-#12 , 1/2"	#12	*LOBBY LTS	1000	B		SPACE					
29	20	1	2-#12 , 1/2"	#12	*LOBBY LTS	1000	C		SPACE					
31	20	1			SPARE		A		SPACE					
33	20	1			SPARE		B		SPACE					
35	20	1			SPARE		C		SPACE					
37	20	1			SPARE		A		SPACE					
39	20	1	2-#12 , 1/2"	#12	MODULAR WORKSTATIONS	1440	B		SPACE					
41	20	1	2-#12 , 1/2"	#12	MODULAR WORKSTATIONS	1440	C		SPACE					

TOTAL CONNECTED LOAD = 25 kVA X 92% DEMAND FACTOR = 23.1 kVA ESTIMATED DEMAND LOAD
PHASE BALANCE (KVA) - A: 8.8 , B: 8.3 , C: 7.9

*LOAD IS EXISTING. REWIRE TO FIRST DEVICE IN CIRCUIT THRU EXISTING RACEWAY.

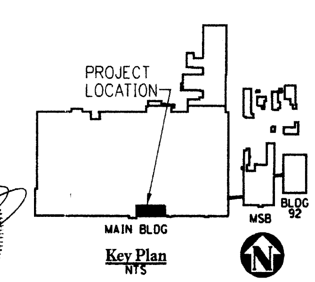

Key Plan
NTS

STATE OF MISSOURI
JOHN CASEY SANBORN
NUMBER PE-2000015064
PROFESSIONAL ENGINEER
4-4-05

NNSA National Nuclear Security Administration
UNITED STATES DEPARTMENT OF ENERGY
KCP KANSAS CITY PLANT OPERATED BY Honeywell

Facility Engineering Services
KCP, LLC

CONTRACT NO.	APPROVAL
PROJECT TITLE	B/2 PHASE I OFFICE INFRASTRUCTURE
DRAWING TITLE	PANELBOARD SCHEDULES

DATE: 03-29-05	PROJECT NO. K15-4G	DRAWING NO. 18442-E12
DR BY: B. EKBERG		
CH BY: C. SANBORN	REFERENCE NO. 98854763	
APP BY: S. STRATTON		SHEET 64 OF 65

36840

COPYRIGHT © 2005 BY BURNS & McDONNELL ENGINEERING COMPANY, INC.

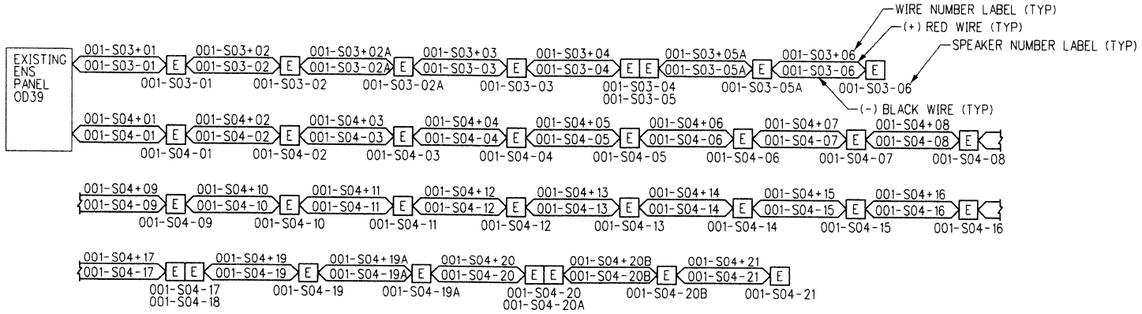

ENS RISER DIAGRAM
NOT TO SCALE

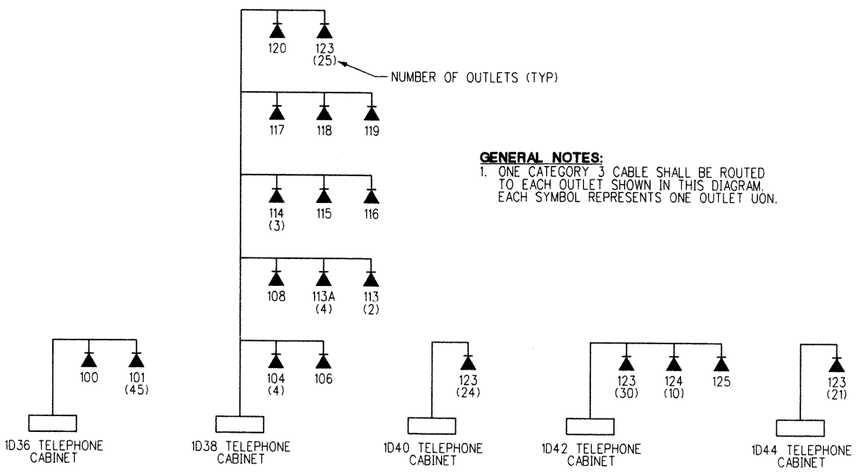

GENERAL NOTES:
1. ONE CATEGORY 3 CABLE SHALL BE ROUTED TO EACH OUTLET SHOWN IN THIS DIAGRAM. EACH SYMBOL REPRESENTS ONE OUTLET UON.

TELEPHONE RISER DIAGRAM
NOT TO SCALE

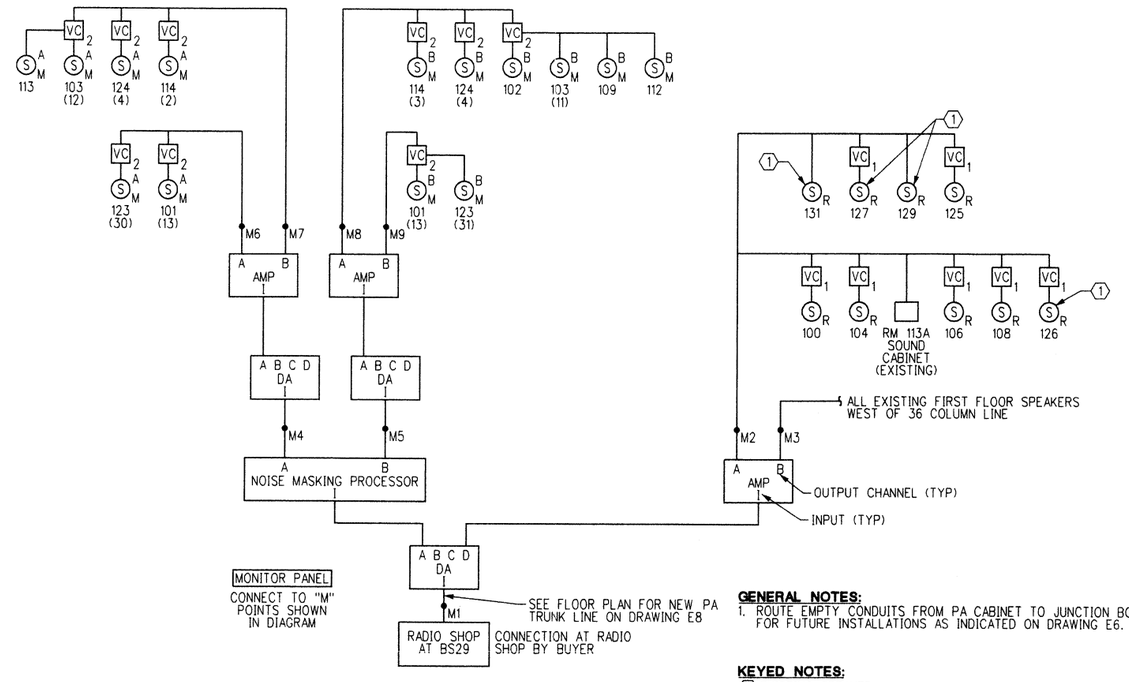

GENERAL NOTES:
1. ROUTE EMPTY CONDUITS FROM PA CABINET TO JUNCTION BOXES FOR FUTURE INSTALLATIONS AS INDICATED ON DRAWING E6.

KEYED NOTES:
(1) EXISTING SPEAKER.

PUBLIC ADDRESS (PAGING/SOUND MASKING) SYSTEM RISER DIAGRAM (BID ALTERNATE 1)
NOT TO SCALE

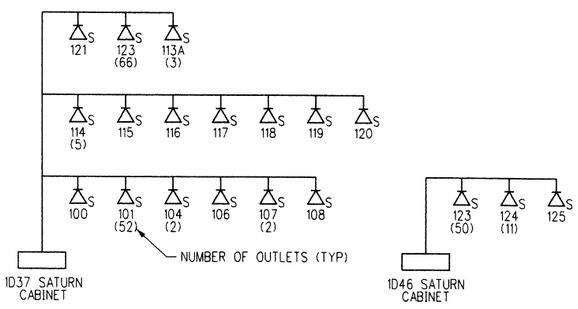

GENERAL NOTES:
1. TWO CATEGORY 6 CABLES SHALL BE ROUTED TO EACH OUTLET SHOWN IN THIS DIAGRAM. EACH SYMBOL REPRESENTS ONE OUTLET UON.

SATURN COMPUTER NETWORK RISER DIAGRAM
NOT TO SCALE

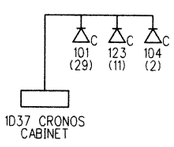

GENERAL NOTES:
1. ONE 62.5/125 MICRON FIBER OPTIC CABLE SHALL BE ROUTED TO EACH OUTLET.

CRONOS COMPUTER NETWORK RISER DIAGRAM
NOT TO SCALE

LIGHTING RELAY SCHEDULE

RELAY•	LTG CKT	RELAY PNL	MOMENTARY SWITCH •	OPERATION
1	1D39 LP1-4	1D39 LRP1	1	ON 6AM-6PM
2	1D39 LP1-5	1D39 LRP1	2	ON 6AM-6PM
3	1D39 LP1-6	1D39 LRP1	3	ON 6AM-6PM
4	1D39 LP1-3	1D39 LRP1	4	ON 6AM-6PM
1	1D42 LP1-5	1D42 LRP1	5	ON 6AM-6PM
2	1D42 LP1-4	1D42 LRP1	6	ON 6AM-6PM
3	1D42 LP1-3	1D42 LRP1	7	ON 6AM-6PM
4	1D42 LP1-1	1D42 LRP1	8	ON 6AM-6PM
5	1D42 LP1-6	1D42 LRP1	9	ON 6AM-6PM

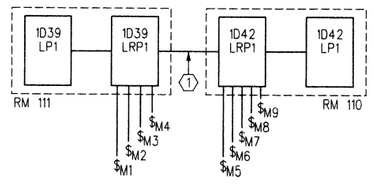

KEYED NOTES:
(1) TWISTED PAIR MODBUS CONNECTION.

LIGHTING CONTROL DIAGRAM
NOT TO SCALE

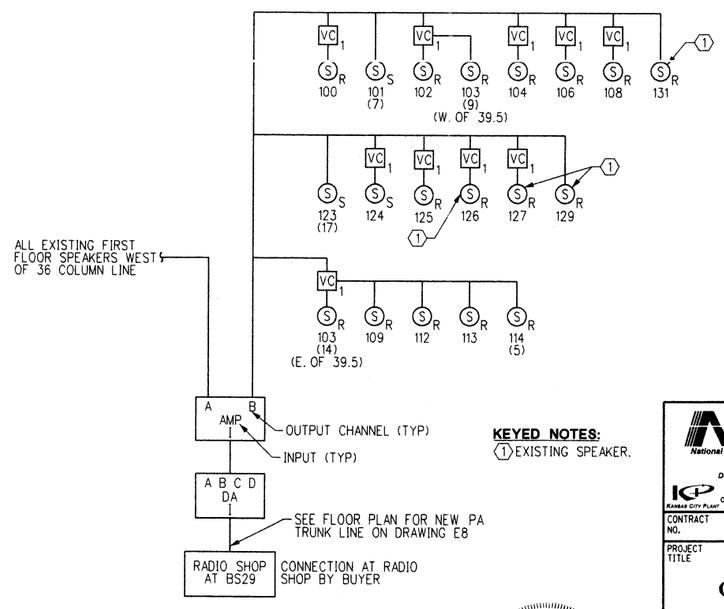

KEYED NOTES:
(1) EXISTING SPEAKER.

PUBLIC ADDRESS (PAGING ONLY) SYSTEM RISER DIAGRAM
NOT TO SCALE

STATE OF MISSOURI
JOHN CASEY SANBORN
NUMBER PE-2003018063
PROFESSIONAL ENGINEER
4-4-05

36840

NNSA National Nuclear Security Administration
UNITED STATES DEPARTMENT OF ENERGY
KANSAS CITY PLANT OPERATED BY Honeywell

Facility Engineering Services
KCP, LLC

CONTRACT NO.
APPROVAL

PROJECT TITLE
B/2 PHASE I OFFICE INFRASTRUCTURE

DRAWING TITLE
RISER DIAGRAMS

DATE: 03-29-05
DR BY: B. EKBERG
CH BY: C. SANBORN
APP BY: S. STRATTON

PROJECT NO. K15-4G
REFERENCE NO. 98854763

DRAWING NO. **18442-E13**
SHEET 65 OF 65

COPYRIGHT © 2005 BY BURNS & McDONNELL ENGINEERING COMPANY, INC.

36840-E13.DGN / 3-23-2005 11:06 / DCD