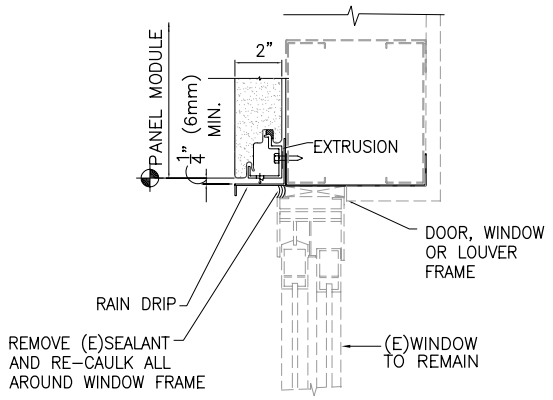

THIS WILL REPLACE ORIGINAL DETAIL

11 / A-9 REVISED WINDOW HEAD DET.

SCALE: 3" = 1'-0"

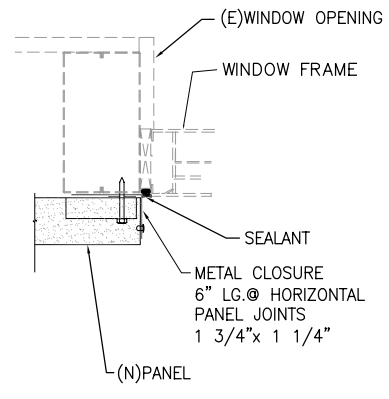

THIS WILL REPLACE ORIGINAL DETAIL

12 / A-9 REVISED WINDOW JAMB DET.

SCALE: 3" = 1'-0"

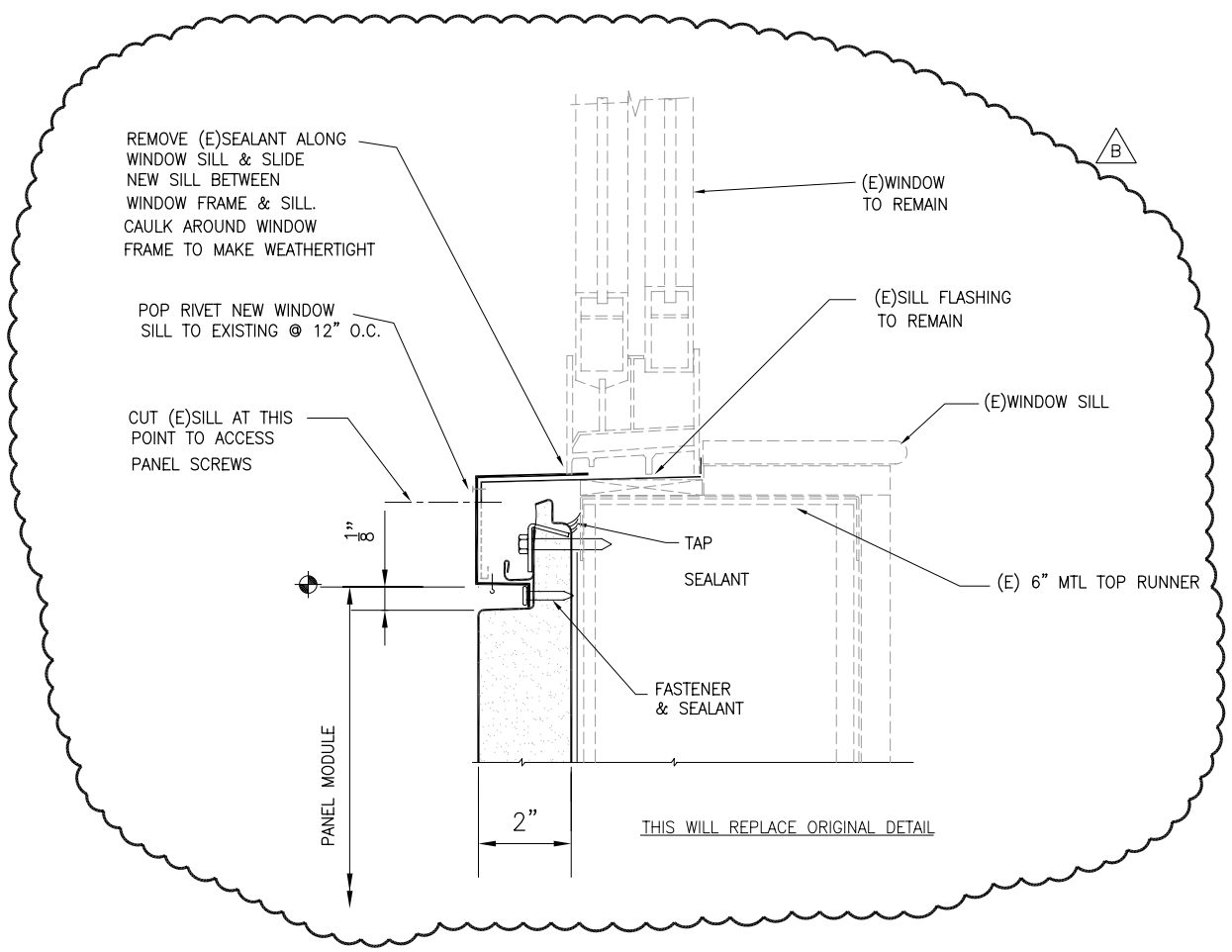

THIS WILL REPLACE ORIGINAL DETAIL

13 / A-9 REVISED WINDOW SILL DET.

SCALE: HALF-SIZE

No.	Date	Revision	Dwn	Chk	D/C	PM	CL
B	6/2/06	ENLARGE DETAIL	IKE	E.S.			
A	2/6/06	AS NOTED	IKE	E.S.			

Lawrence Livermore National Laboratory
Plant Engineering, Livermore, CA 94550

BUILDING ENVELOPE REPLACEMENT
BUILDING 663 MEDICAL FACILTY

WINDOW DETAILS

PE Stamp: REGISTERED PROFESSIONAL ENGINEER — STEVEN P. SHIH — No. 18785 — Exp. 6/30/07 — CIVIL — STATE OF CALIFORNIA

Des: E. FERNANDEZ	8/3/05	Scale: AS NOTED
Dwn: IKE FERNANDEZ	8/3/05	PFNID: 663-05-001
Chk: S. SHIH	8/10/05	S/W: ADT2006
Dwg. No. PLA2005-0663-0004DB		Sht. No. A-3 of

File Name: H:\Ike_F\600\663\PLA2005-0663-0004DB.DWG Date Plotted: June 06, 2006 - 3:51pm